TECHNOLOGY GROUP




mk Linear Motion

One construction kit – many options


Profile Technology


Conveyor Technology


Factory Equipment


Linear Motion

Advantages of the mk modular system

- Everything comes from one source: interchangeable modules and components for profile, conveyor and linear technology, as well as factory equipment
- Outsourcing of various project functions at a fixed price helps integrators to minimize their project costs and risks
- Coverage of all basic mechanical functions for modern factory automation
- The widest profile range on the market reduces the need for specialized design and therefore provides a cost benefit due to standardization
- High material quality, solid connecting technology and high-quality accessories guarantee high loading capacity and long service life
- The highest flexibility for system extensions or alterations due to the reusability of individual components and modules
- The degree of assembly of our products can be freely selected, guaranteeing optimum adaptation to the existing utilization of resources at all times
- The modular construction is subject to constant optimization and extension because mk itself uses it daily for the preparation of customer-specific solutions

Table of contents


Selection Guidelines 4


Introducing mk 6


Information about Linear Motion 8


mk Gliding Assemblies 10


mk Track Roller Assemblies 28


mk Recirculating Ball Bearing Guides 94


Application Examples 102


Our service 110

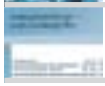
Index 114

Selection Guidelines

Guide style / Requirement	Gliding Assemblies	Track Roller Assemblies	Recirculating Ball Bearing Guides
	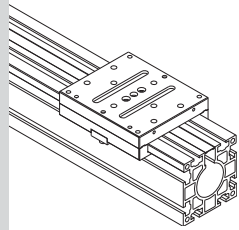	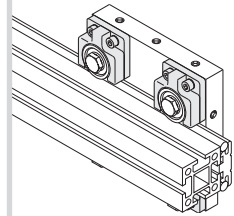	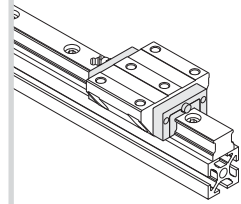
	➥ Page 10	➥ Page 28	➥ Page 94
Durabilidad			
high		•	•
short	•		
Precision			
very high			•
high		•	
medium	•		
low			
Speed			
very high		•	
high			•
medium			
low	•		
Load Capacity			
very high			•
high		•	
medium	•		
low			
Stiffness			
very high			
high			•
medium	•	•	
low			
Maintenance			
limited	•		
regularly		•	•
often			

Introducing mk

„We live our passion for technology – that shapes us for over 40 years“

Maschinenbau Kitz GmbH, was founded in 1966 and is headquartered in Troisdorf, Germany, and also operates internationally; together with its subsidiaries and sales parteners as the “mk Technology Group“. Backed by over 40 years of experience, mk sells mechanical modules, components for profile, conveyor and

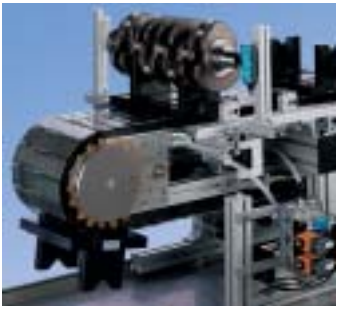

linear technology, as well as factory equipment. These products are based on more than 250 different aluminum profiles and extensive stainless steel sheet metal work. The modular construction principle these products offer ensures full compatibility between all products. The resulting benefits include considerable cost savings during installation of the system, as well as a high degree of flexibility for future extensions and re-configurations. Our most important target markets include original machine constructions, as well as work in the automotive, electrical, packaging, pharmaceutical and food industries.

Information about Linear Motion

Advantages of mk Linear Motion

- Optimal functionality thanks to the wide range of tracks designed to meet customer needs
- Material, cost and space savings due to compatibility with mk profile series: Tracks can be mounted to the existing supporting structure directly
- Fast and easy installation of linear tracks due to add-on principle
- Precision running with mk clamping profile ensures maximum parallelism of the guide rods
- High reliability due to high-quality materials and tested manfufactured parts
- Competent advice and support in design from mk sales engineers

Application Example
Structural Profile Series 50
and LZR 2000-38.41-15.

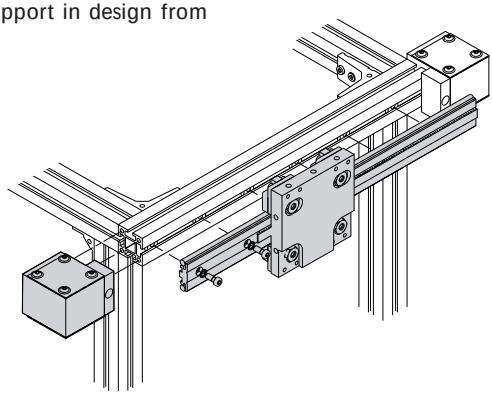

Our Guidelines

Criteria for the selection of the right guide

Criteria for Gliding Assemblies
- High static load capacity
- Low maintenance, good wear resistance
- Good damping
- Compact construction
- Quiet

Criteria for Track Roller Assemblies
- Compensate for relatively large misalignments
- Well suited for dirty environments (dust, chips, etc.)
- Suitable for high accelerations (to a = 50 m/s²) and high speeds (to v = 10 m/s)
- Low rolling resistance
- Light to medium loads
- Economically practical solution over longer lengths through simple mounting of track
- Can be loaded in all directions (forces and moments)
- Varying preload setting using excentric bushings

Criteria for Recirculating Ball Bearing Guides
- 4-row recirculating ball bearings can be loaded in all directions (forces and moments)
- High load capacity, high stiffness
- Compact construction
- One track accommodates various carriage types
- Lightly preloaded (standard), available with play and higher preloads
- Medium to high accelerations (to a = 30 m/s²) and speeds (to v = 5 m/s)
- High precision of carriages

Gliding Assemblies

Track Roller Assemblies

Recirculating Ball Bearing Guides

Gliding Assemblies
- High static loading capacity due to large contact surfaces ensures low maintenance operation
- Good wear compensation
- Good damping
- Compact design
- Quiet
- For applications with need for manual adjustment

Track Roller Assemblies
- Compensate for relatively large misalignment
- Well-suited to dirty environments
- High accelerations
- Low rolling resistance
- Simple and cost-effective mounting of the track
- Can be loaded in all directions

Recirculating Ball Bearing Guides
- Can be loaded in all directions
- High load capacity
- High rigidity
- Compact design
- One track for different carriage types
- High accelerations
- High speeds
- High precision

mk Gliding Assemblies

Contents mk Gliding Assemblies

Linear Modules 12

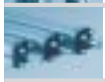

Glide Bushings 23

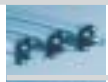

Glide Assembly System 2000 24

Pneumatic Glide System 2000 26

mk Gliding Assemblies

Informationen Linear Modules

Technical Informations

The structural beams which distinguish the two basic sizes of our Linear Modules are our standard Profile mk 2015 (50 x 50 mm) and Profile mk 2011 (100 x 100 mm). The profiles are reworked and feature a high-quality surface coating which provides a low friction surface while enhancing the profile with added wear resistance. Standard features of the linear modules include trapezoidal spindles with POM-nuts which are protected from contaminants by a stainless steel cover strip.

These linear modules are maintenance-free. On request special configurations are possible including stainless steel spindles, trapezoidal bronze nuts, ball screws, as well as motor driven modules.

Styles

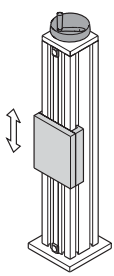

Linear Module with one carriage

Linear Module with two carriages, synchronous travel (see directional arrows)

optionally available with adjustable lower skid

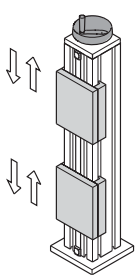

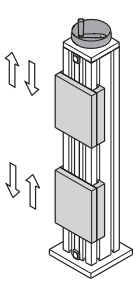

Linear Module with two carriages, opposing travel (see directional arrows)

Combinations

A connection kit enables two adjusting units to be combined to form one biaxial system.

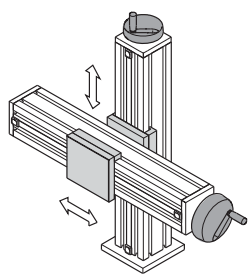

Combination kit
for cross-VST 2015 **B46.07.020**

Combination kit
for cross-VST 2011 **B46.07.021**

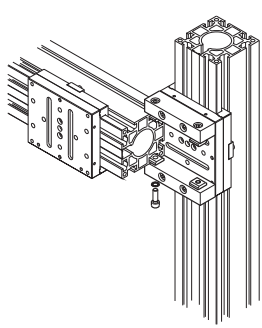

Clamps and Wipers

The felt wipers prevent material contaminants from lodging between the carriage and track. The wipers are an accessory which can be added to the carriage at any time.

The carriage can be fixed in position using a clamp plate, which is tightened using with a socket screw. As an option, this screw can be replaced with an adjustable handle.

Felt Wiper System 2015
B03.00.011

Felt Wiper System 2011
B03.00.012

Felt wiper
K110030061

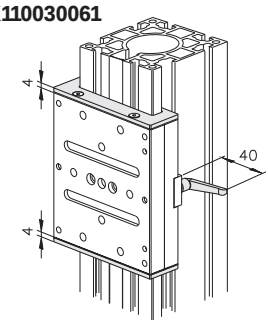

Choice of operating options

The linear modules are available in 3 basic, manually operated configurations.

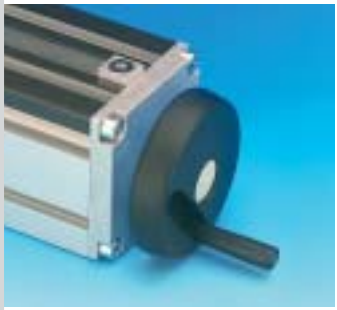

Linear Module with Handwheel. The handwheel is operated manually with no travel information.

Linear Module with Handwheel and Scale. With this option, carriage travel can be read.

Linear Module with Handwheel and mechanical display. Carriage travel and relative position is indicated by the display.

Motor Driven

On request, carriage modules can be motor driven. The maximum carriage speed is limited to v = 1 m/min. We can assist you in the selection process.

Example of a motor driven linear module

Order Example

Linear Module				**VST 2011-H**
Ident-No.				**B85.00.020**
Length				L = ... mm
Stroke				H = ... mm
Drive Option	Handwheel		Scale	Display*
Base Plate	Version A			Version B
Felt Wiper	yes	no		
Clamp Handle	yes	no		

For Linear Module with two carriages, synchronous travel, please indicate choice of one or two trapezoidal nuts**.

With 2nd trapezoidal nut
Lx = ... mm (± 2 mm)

*For display, please indicate desired orientation and direction.

**Use of one trapezoidal nut indicates that only one carriage is to be driven.

Linear Modules

System 2015

Structural profile:	mk 2015 (50 x 50 mm)
Trapezoidal Spindle:	Tr 16 x 4
Axial Spindle Load:	500 N
Standard Lengths, L:	250 mm, 500 mm, 750 mm and 1000 mm

Linear travel per revolution is 4 mm, minimum stroke length is 10 mm, maximum length L = 1400 mm.

Handwheel

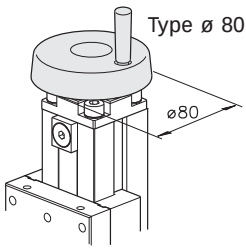

Base plates

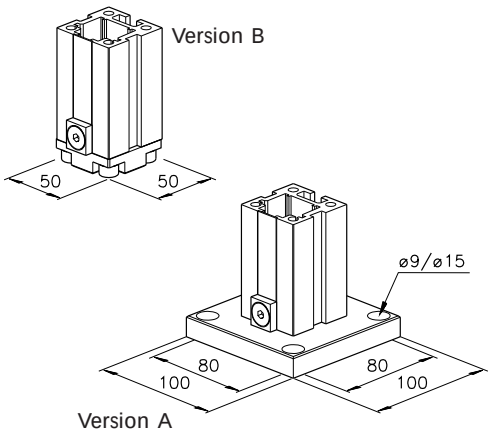

Scale

System 2015 without Scale

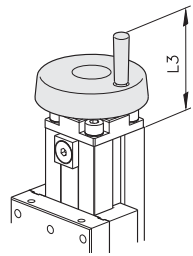

Type ø 80:
L3 = 83 mm

System 2015 with Scale

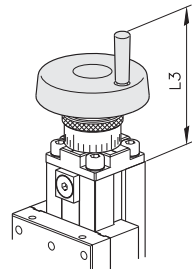

The scale has a pitch of 0.1 mm.

Type ø 80: L3 = 110 mm

System 2015 with mechanical display

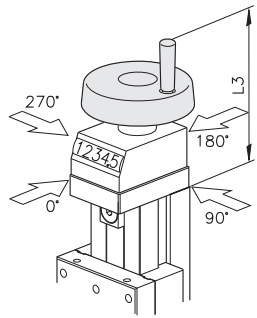

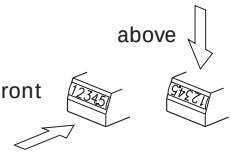

When ordering, please indicate installed orientation and display direction.
Pitch 0.05 mm
Type ø 80: L3 = 122 mm

VST 2015

with one carriage

System 2015

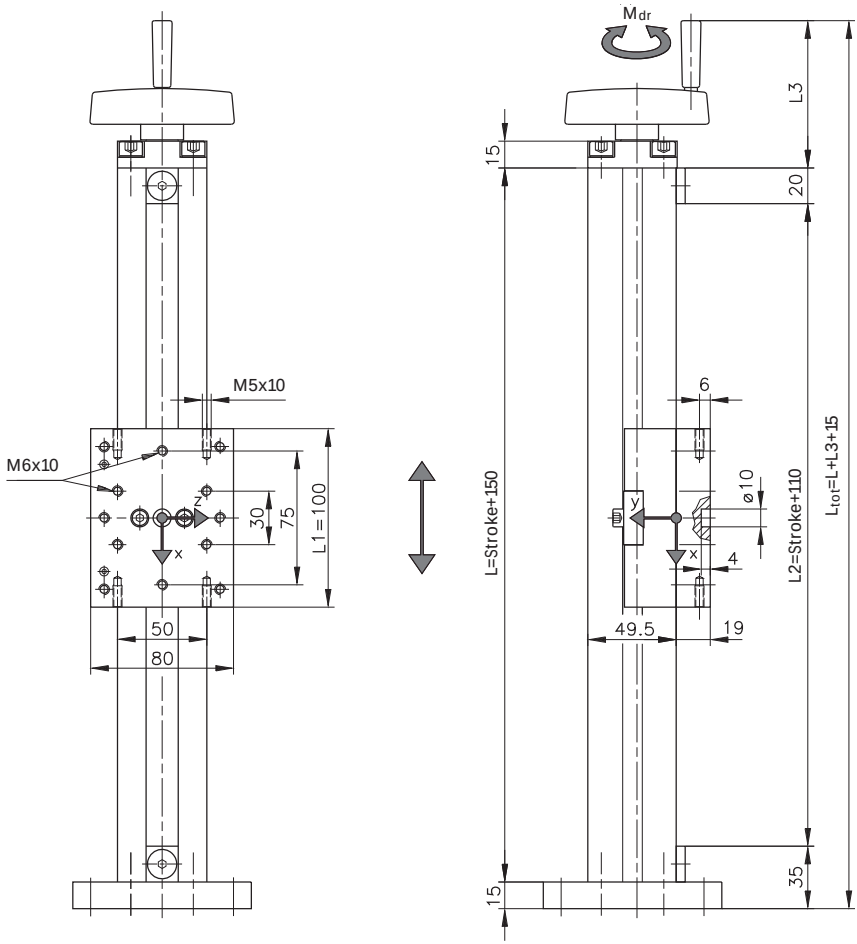

Versions

Version	without Scale	Scale	Display
Description	VST 2015-H	VST 2015-S	VST 2015-D
Type	ø 80	ø 80	ø 80
Ident-No.	**B85.00.015**	**B85.00.016**	**B85.00.017**

maximum loads VST 2015

F_y [N]	F_z [N]	M_x [Nm]	M_y [Nm]	M_z [Nm]	M_{dr} [Nm]	n [min^{-1}]	v [m/min]
750	750	25	25	25	2.5	250	1

Confirm maximum load specifications with intended application

VST 2015

with two carriages synchronous travel or independent

System 2015

Options:
VST with two trapezoidal nuts: both carriages synchronous travel (see directional arrows)
VST with one trapezoidal nut: lower carriage manually adjustable

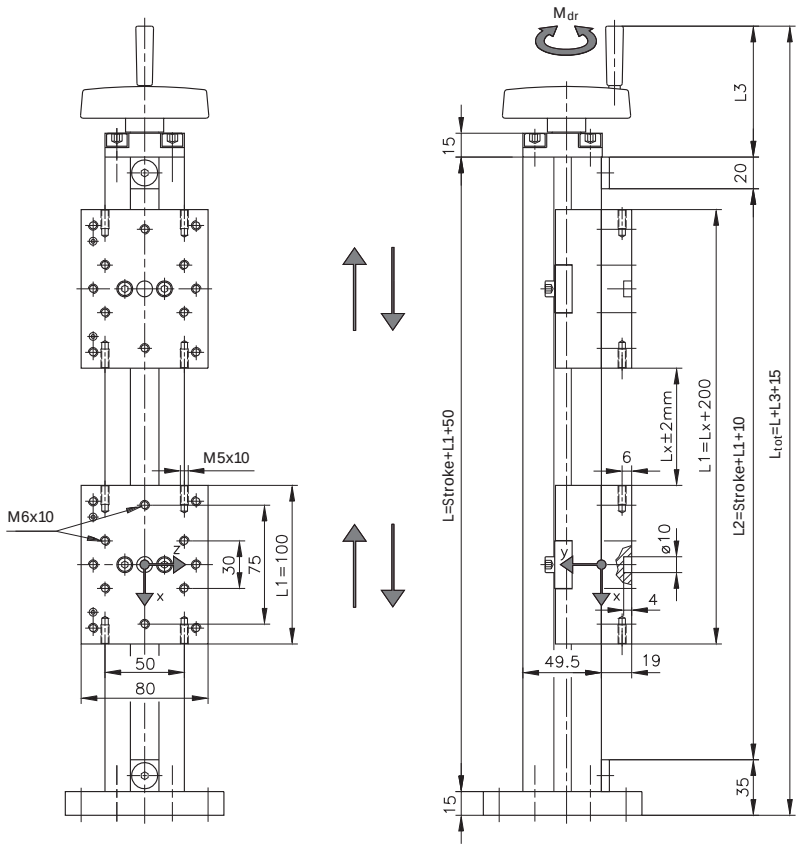

Versions

Version	without Scale	Scale	Display
Description	VST 2015-H-2	VST 2015-S-2	VST 2015-D-2
Type	ø 80	ø 80	ø 80
Ident-No.	**B85.00.115**	**B85.00.116**	**B85.00.117**

maximum loads VST 2015

F_y* [N]	F_z* [N]	M_x* [Nm]	M_y* [Nm]	M_z* [Nm]	M_{dr} [Nm]	n [min^{-1}]	v [m/min]
750	750	25	25	25	2.5	250	1

Confirm maximum load specifications with intended application *Maximum loads per carriage

VST 2015

with two carriages opposing travel

System 2015

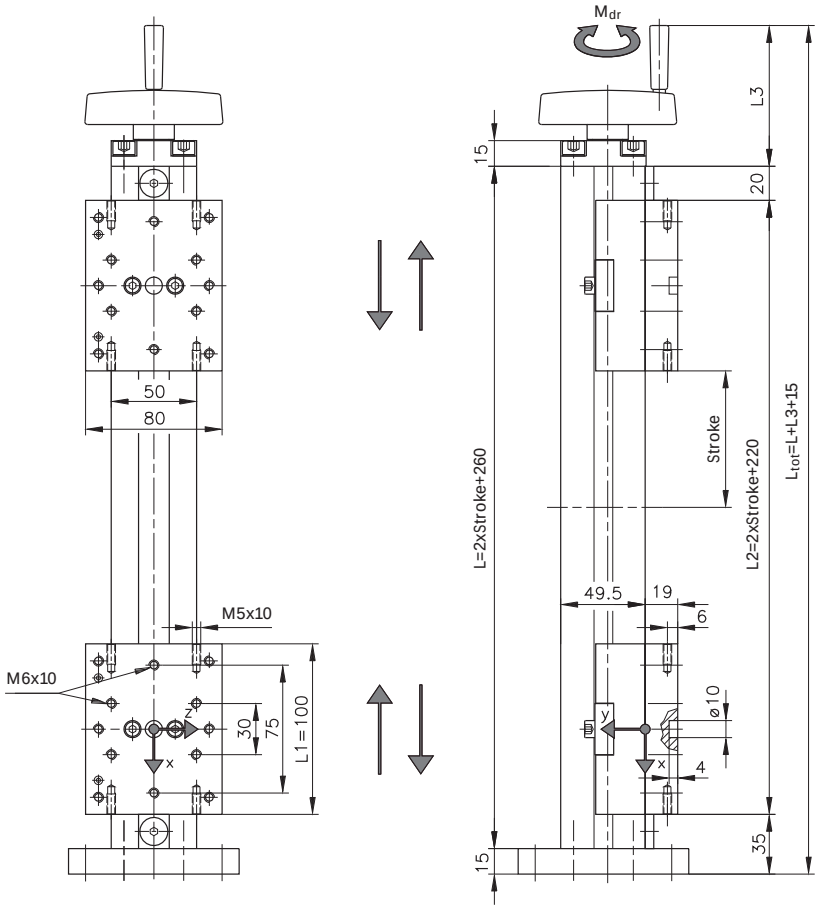

Versions

Version	without Scale	Scale	Display
Description	VST 2015-H-G	VST 2015-S-G	VST 2015-D-G
Type	ø 80	ø 80	ø 80
Ident-No.	**B85.00.215**	**B85.00.216**	**B85.00.217**

maximum loads VST 2015

F_y* [N]	F_z* [N]	M_x* [Nm]	M_y* [Nm]	M_z* [Nm]	M_{dr} [Nm]	n [min^{-1}]	v [m/min]
750	750	25	25	25	2.5	250	1

Confirm maximum load specifications with intended application *Maximum loads per carriage

Linear Modules

System 2011

Structural profile:	mk 2011 (100 x 100 mm)
Trapezoidal Spindle:	Tr 20 x 4
Axial Spindle Load:	1000 N
Standard Lengths, L:	250 mm, 500 mm, 750 mm and 1000 mm

Linear Travel per revolution is 4 mm, minimum stroke length is 10 mm, maximum length L = 1400 mm.

Handwheels

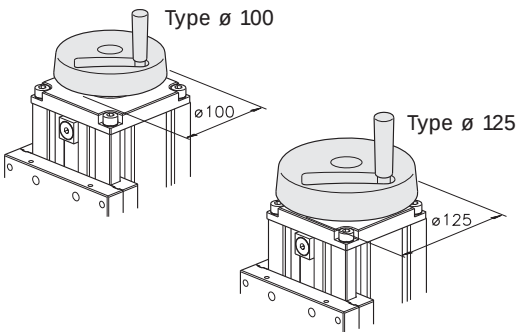

Base plates

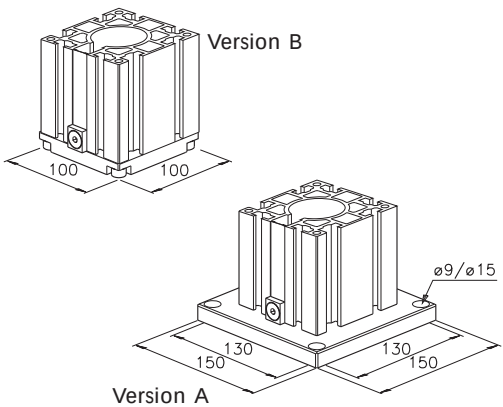

Scale

System 2011 without Scale

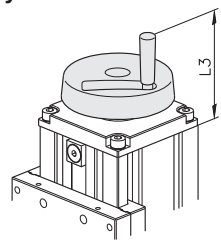

Type ø 100: L3=97 mm
Type ø 125: L3=110 mm

System 2011 with Scale

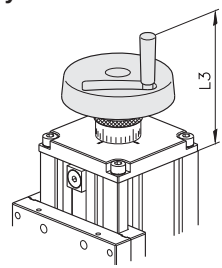

The scale has a pitch of 0.1 mm

Type ø 100: L3=123 mm
Type ø 125: L3=136 mm

System 2011 with mechanical display

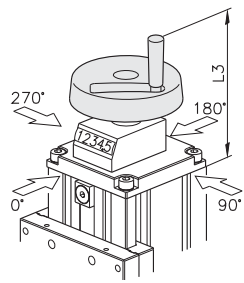

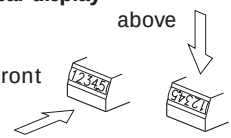

When ordering, please indicate installed orientation and display direction. Pitch 0.05 mm

Type ø 100: L3 = 136 mm
Type ø 125: L3 = 149 mm

VST 2011

with one carriage

System 2011

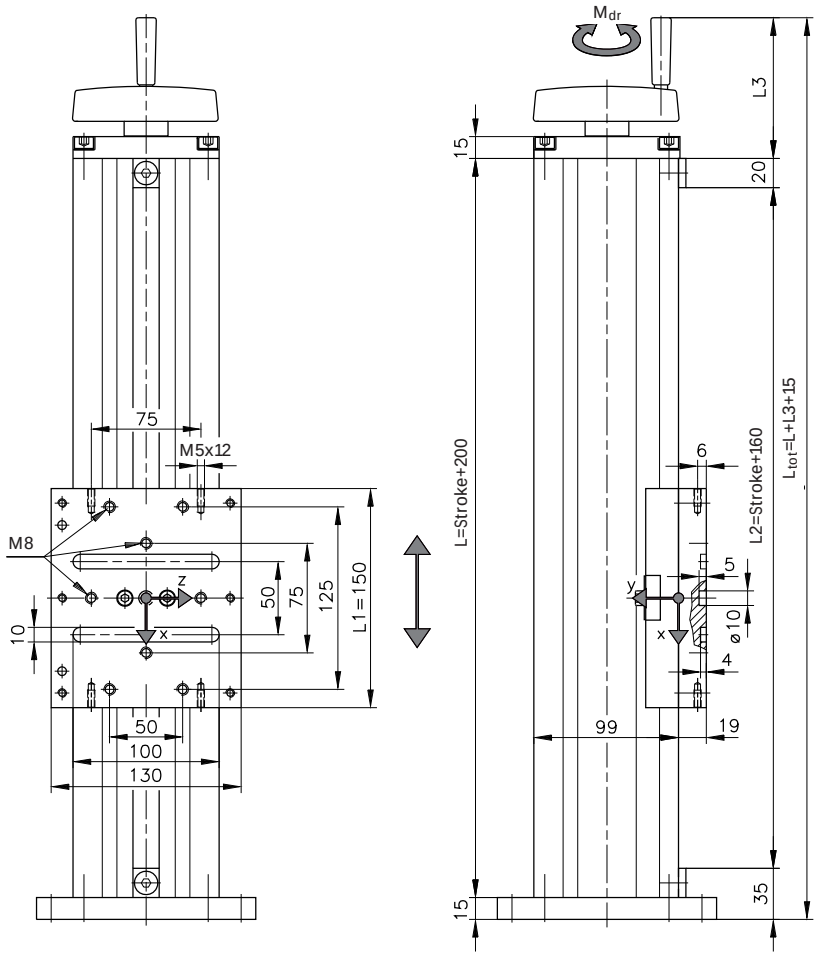

Versions

Version	without Scale		Scale		Display	
Description	VST 2011-H	VST 2011-H	VST 2011-S	VST 2011-S	VST 2011-D	VST 2011-D
Type	ø 100	ø 125	ø 100	ø 125	ø 100	ø 125
Ident-No.	**B85.00.020**	**B85.00.025**	**B85.00.021**	**B85.00.026**	**B85.00.022**	**B85.00.027**

maximum loads VST 2011

F_y [N]	F_z [N]	M_x [Nm]	M_y [Nm]	M_z [Nm]	M_{dr} [Nm]	n [min^{-1}]	v [m/min]
2000	2000	75	100	100	6	250	1

Confirm maximum load specifications with intended application

VST 2011

with two carriages synchronous travel

System 2011

Options:
VST with two trapezoidal nuts: both carriages synchronous travel (see directional arrows)
VST with one trapezoidal nut: lower carriage manually adjustable

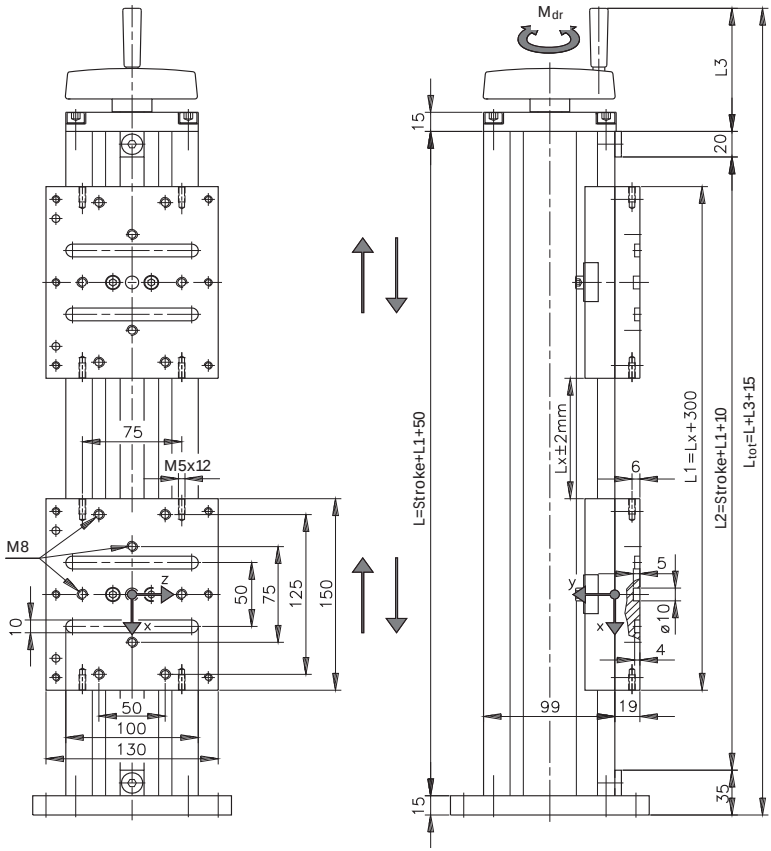

Versions (Version with or without 2nd trapezoidal nut available)

Version	without Scale		Scale		Display	
Description	VST 2011-H-2	VST 2011-H-2	VST 2011-S-2	VST 2011-S-2	VST 2011-D-2	VST 2011-D-2
Type	ø 100	ø 125	ø 100	ø 125	ø 100	ø 125
Ident-No.	**B85.00.120**	**B85.00.125**	**B85.00.121**	**B85.00.126**	**B85.00.122**	**B85.00.127**

maximum loads VST 2011

F_y* [N]	F_z* [N]	M_x* [Nm]	M_y* [Nm]	M_z* [Nm]	M_{dr} [Nm]	n [min^{-1}]	v [m/min]
2000	2000	75	100	100	6	250	1

Confirm maximum load specifications with intended application *Maximum loads per carriage

VST 2011

with two carriages opposing travel

System 2011

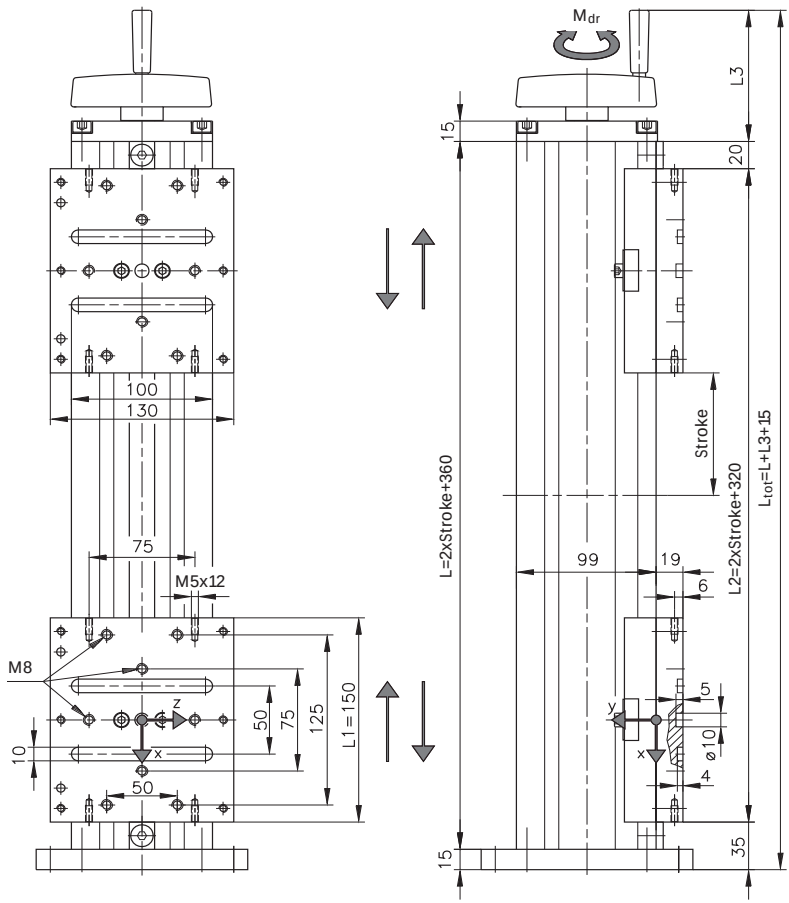

Versions

Version	without Scale		Scale		Display	
Description	VST 2011-H-G	VST 2011-H-G	VST 2011-S-G	VST 2011-S-G	VST 2011-D-G	VST 2011-D-G
Type	ø 100	ø 125	ø 100	ø 125	ø 100	ø 125
Ident-No.	**B85.00.220**	**B85.00.225**	**B85.00.221**	**B85.00.226**	**B85.00.222**	**B85.00.227**

maximum loads VST 2011

F_y* [N]	F_z* [N]	M_x* [Nm]	M_y* [Nm]	M_z* [Nm]	M_{dr} [Nm]	n [min⁻¹]	v [m/min]
2000	2000	75	100	100	6	250	1

Confirm maximum load specifications with intended application *Maximum loads per carriage

Examples Glide Bushings

System 2000

Pick and Place with Suction Cup

Combination using Pneumatic Glide System 2000.
2-axis system, part handling with vacuum.

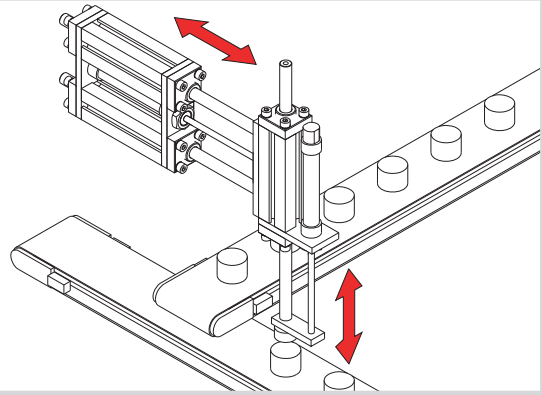

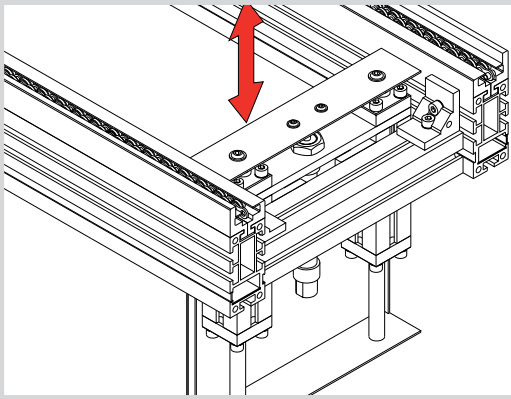

Pallet Stop

Pneumatic Glide System 2000 integrated within a dual-lane conveyor for use as a pallet stop.

Swing Gate

Swing gate manufactured using Glide Assembly System 2000 used as a damping assembly above product transport.

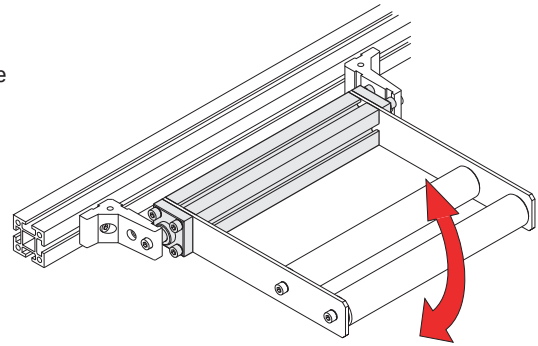

Glide Bushings

Glide Assembly

System 2000

Glide Assembly System 2000 consists of glide bushings mounted to structural profile mk 2000 (50 x 50 mm), as well as an appropriate guide shaft (rod). Standard lengths: 150 mm, 200 mm, 250 mm and 300 mm. The minimum Profile Lp is 50 mm, the maximum Profile Lp is 750 mm. The Glide Assembly requires no maintenance. When ordering, please note that the various shaft options are ordered separately (see page 25).

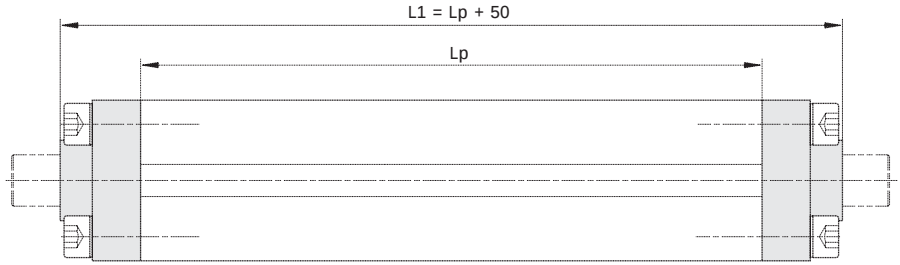

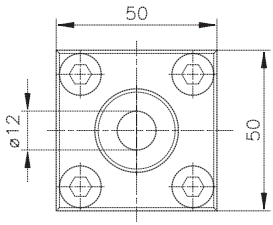

B40.02.005

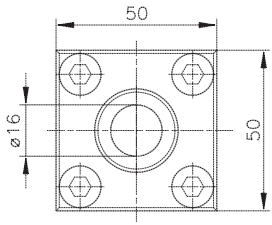

B40.02.006

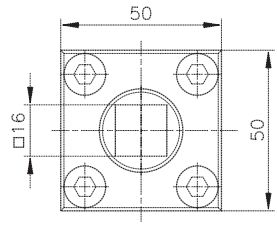

B40.02.007

Versions

Ident-No.	Description	for Shaft*
B40.02.005	WF 2000-12	ø 12 h 6
B40.02.006	WF 2000-16	ø 16 h 6
B40.02.007	WF 2000-16.16	□ 16 h 9

*Order shaft separately

System 2000

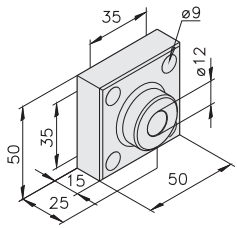

Bushing ø 12
35.00.0007
D=12 mm,
POM

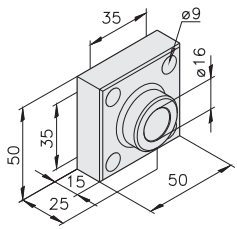

Bushing ø 16
35.00.0006
D=16 mm,
POM

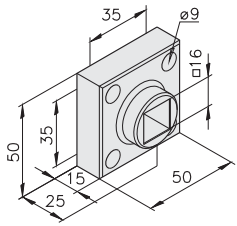

Bushing □ 16
35.00.0008
POM

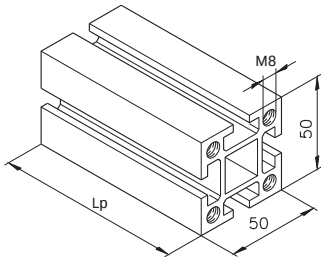

Profile mk 2000
5100AD....*
2.85 kg/m
Al

Shaft ø 12, M6
0100AF. ....*
St50K h6

Shaft ø 16, M8
0100AA. ....*
St50K h6

Stock length 150, 200, 250, 300, 350 and 400 mm

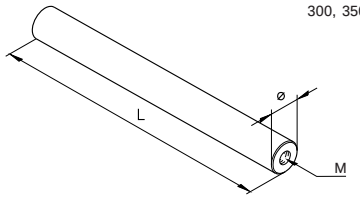

Shaft ø 12, M6
0100AE. ....*
CF53

Shaft ø 16, M8
0100AB. ....*
CF53

hardened shaft h6

Stock length 150, 200, 250, 300, 350 and 400 mm

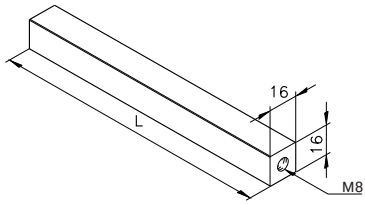

Shaft □ 16, M8
0101AA. ....*
Steel C45 polished h9

Stock length 150, 200, 250, 300, 350 and 400 mm

....* Length in mm

Glide Bushings

Pneumatic Glide

System 2000

The standard pneumatic unit is delivered with one cylinder with ø 20 mm piston. A handful of components are all that is required to modify Pneumatic Glide System 2000. Various manufacturers pneumatic cylinders with 20 or 25 mm bores and strokes to 300 mm can be used. Customer standards can be accommodated as the system is based on the air cylinder. The mechanics and connection remain the same. The cylinder and connection must be ordered separately.

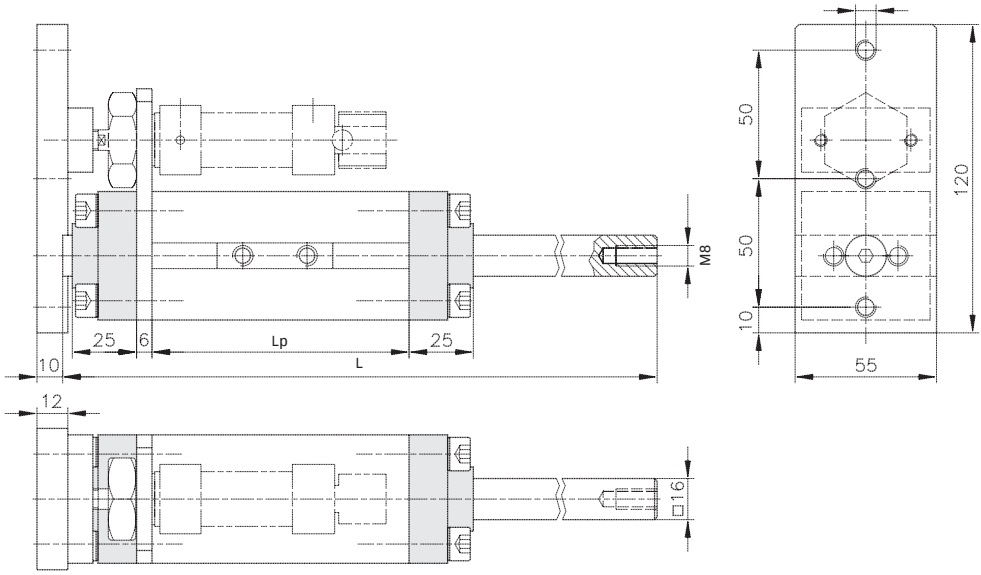

Versions

Ident-No.	Description	D Bore ø [mm]	F_x* [N]	Stroke [mm]	D Bore [mm]	Lp [mm]	L [mm]	Cylinder Ident-No.
B38.01.003	LPZ 2000-16.20	20	150	25	20	75	200	**K501000655**
				50	20	75	200	**K501000657**
				80	20	75	250	**K501000658**
				100	20	75	250	**K501000659**
				200	20	100	350	**K501000662**

■ If ordering with cylinder, please append with appropriate Cylinder Ident-No.

* Cylinder extension force at 6 bar (87 psi)

System 2000

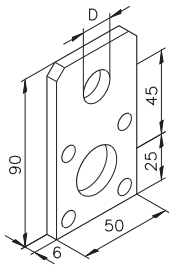

Cylinder Plate
50.05.0036
Al, D = 22.5 mm
Cylinder ø 20 and ø 25

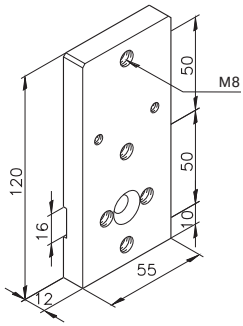

Cylinder Plate
50.09.0017
Al

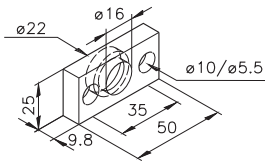

Cylinder Plate
50.09.0018
Al

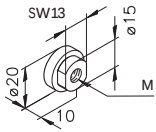

Washer M8
63.03.0001
Steel, Cylinder ø 20

Washer M10 x 125
63.03.0003
Steel, Cylinder ø 25

Nut M8
D09348
Cylinder ø 20

Nut M10 x 125
41.00.0014
Cylinder ø 25

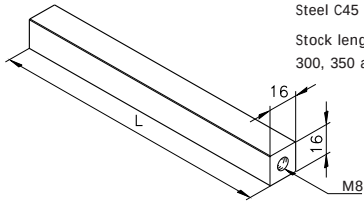

Shaft □ 16, M8
0101AA. ....*
Steel C45 polished h9
Stock length 150, 200, 250, 300, 350 and 400 mm

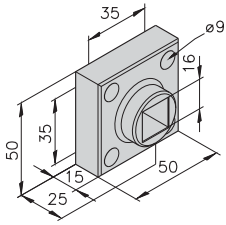

Bushing □ 16
35.00.0008
POM

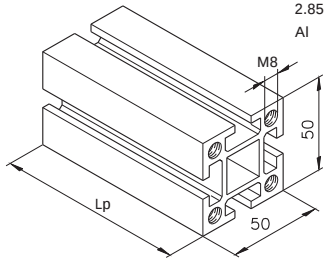

Profile mk 2000
5100AD....*
2.85 kg/m
Al

....* Length in mm

mk Track Roller Assemblies

Contents mk Track Roller Assemblies

General Information 30

Calculations and System Selection 32

Linear Assemblies 40

- Selection Track Rollers 40
- Series 25 42
- Series 40 46
- Series 50 58
- Series 60 64
- Components 70

Linear Module LZR 82

- General Information 82
- Series 25 85
- Series 50 86

Track Roller Assemblies

General Information

Roller Assemblies

Basic Construction

The basic elements used to construct mk Linear Systems consist of a track and a carriage. The linear track consists of a clamping profile which is mounted directly to the support profile. Attention must be paid to the series and the dimensions of the supporting profile. The carriage consists of grooved rollers mounted to the carriage plate. The available selection of the linear assemblies and modules is a function of the support profile and the guide rods. For the support profile, application suitability (with respect to deflection) and strength of the material is paramount. For proper operation of our linear systems, a maximum deflection of 1 mm/m is allowable. Deflection and strength calculations are based upon standard mechanical formulas.

Support Profiles

All linear assemblies and modules shown in this catalog are based on the structural profiles of the Profile Technology System mk 2000. When used in combination with foamed profiles, gantries can be manufactured in lengths of up to 10 meters.

Example mk Structural Profiles

Series 25 Series 40 Series 50 Series 60

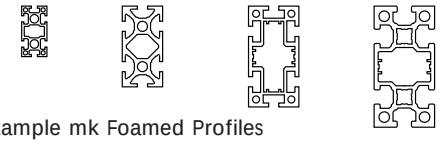

Example mk Foamed Profiles

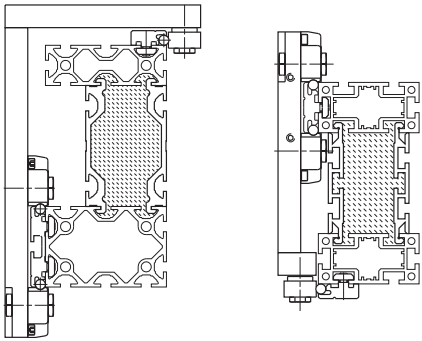

Profiles Track Series 25

ø 6 mm ø 6 mm

Profiles Track Series 40

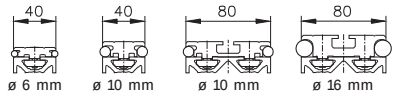

ø 6 mm ø 10 mm ø 10 mm ø 16 mm

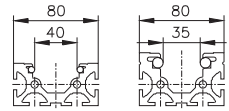

ø 6 mm ø 10 mm

Profiles Track Series 50

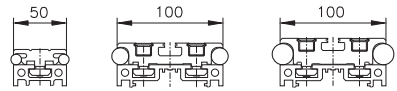

ø 10 mm ø 16 mm ø 20 mm

Profiles Track Series 60

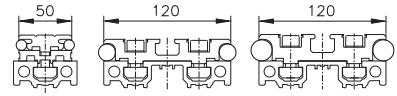

ø 10 mm ø 16 mm ø 20 mm

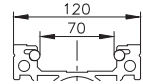

ø 10 mm

Adapter Profiles

Adapter Profiles are used in instances where a larger supporting profile is desired (or required) and the standard carriage interferes with such an arrangement. In addition, adapter profiles can be used to combine linear components of different profile series.

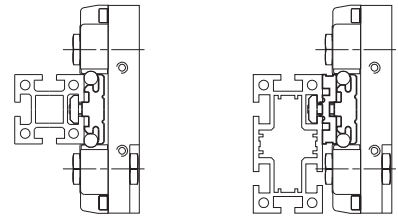

without Adapter Profile with Adapter Profile

Stock Lengths

The maximum length of linear assemblies is 6000 mm. This may be extended using multiple support profiles, rods and clamping profiles.

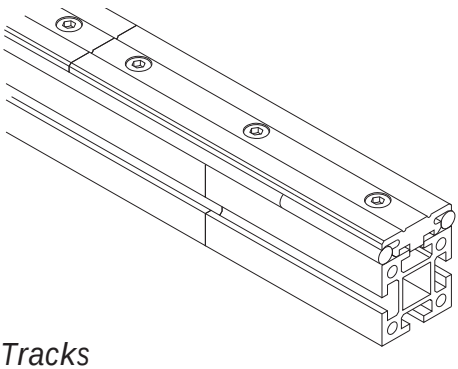

Tracks

The load capacity of the track is based primarily on the desired guide rod diameter and appropriate roller. mk offers guide rods in four diameters. The standard guide rods (polished to h6) are precision steel shafting Cf 53 (1.1213). Optionally, X46 Cr13 (1.4034, stainless martensitic steel, corrosion resistant) or corrosion resistant galvanized Cf 53 rods are also available.

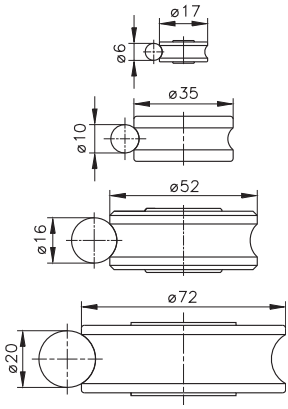

Guide Rod 6
0.22 kg/m

Guide Rod 10
0.62 kg/m

Guide Rod 16
1.58 kg/m

Guide Rod 20
2.47 kg/m

Carriages

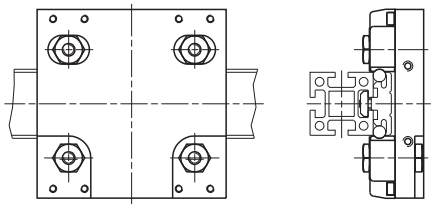

The mk carriage comes standard with four rollers, although optional two and three roller versions are available on request.

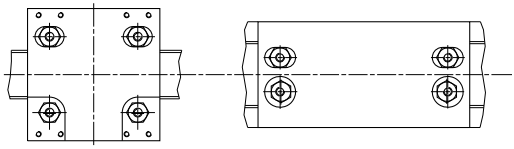

Standard carriage, (exterior rollers)

Standard carriage, (interior rollers)

Construction

mk Carriages are available in two additional optional configurations.

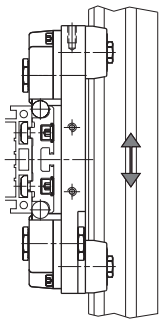

Cross-carriages

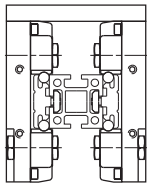

Dual-carriages

Track Roller Assemblies

Calculations and System Selection

Selecting Series 25 Support Profiles

Calculations for maximum Stress and Deflection

Load at Center:
Maximum Stress

$$M_{bmax} = \frac{F \cdot L}{4} \qquad \sigma_b = \frac{M_{bmax}}{W_{x,y}} \qquad S = \frac{R_{p0.2}}{\sigma_b}$$

$R_{p0.2}$ = 195 N/mm² (AlMgSi 0.5 F25)

Maximum Deflection

$$d = \frac{F \cdot L^3}{48 \cdot E \cdot I_{x,y}}$$

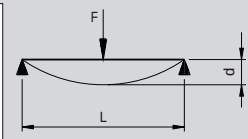

Uniform Load:
Maximum Stress

$$M_{bmax} = \frac{q \cdot L^2}{8} \qquad \sigma_b = \frac{M_{bmax}}{W_{x,y}} \qquad S = \frac{R_{p0.2}}{\sigma_b}$$

$R_{p0.2}$ = 195 N/mm² (AlMgSi 0.5 F25)

Maximum Deflection

$$d = \frac{5}{384} \cdot \frac{q \cdot L^4}{E \cdot I_{x,y}}$$

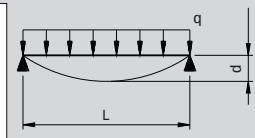

Graphical Selection

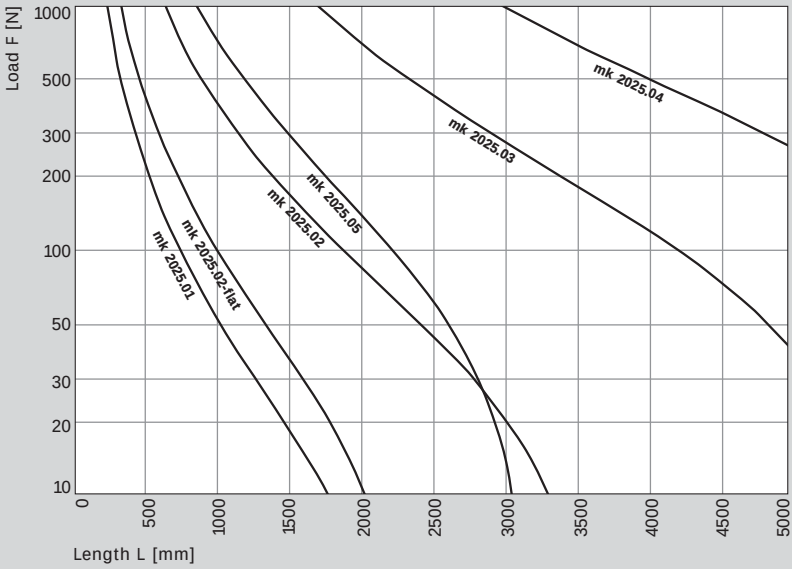

Application Diagram

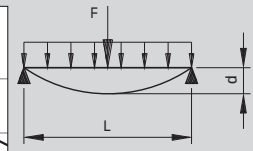

With point load at center and profile weight for the case:

$$\frac{d}{L} = \frac{1}{1000}$$

Example:
F = 100 N
L = 1000 mm
=> mk 2025.02-flat

with $\frac{d}{L} \leq \frac{1}{1000}$

is suitable

Support Profiles Series 25

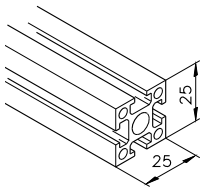

Profile mk 2025.01

25.01. ....*

0.75 kg/m
AlMgSi 0.5 F25

A	279.10	mm^2
Ix	1.70	cm^4
Iy	1.70	cm^4
Wx	1.40	cm^3
Wy	1.40	cm^3

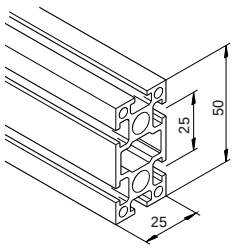

Profile mk 2025.02

25.02. ....*

1.35 kg/m
AlMgSi 0.5 F25

A	501.10	mm^2
Ix	12.20	cm^4
Iy	3.30	cm^4
Wx	4.90	cm^3
Wy	2.60	cm^3

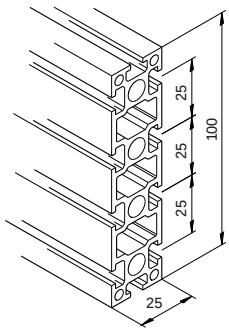

Profile mk 2025.03

25.03. ....*

2.55 kg/m
AlMgSi 0.5 F25

A	945.10	mm^2
Ix	87.00	cm^4
Iy	6.40	cm^4
Wx	17.40	cm^3
Wy	5.20	cm^3

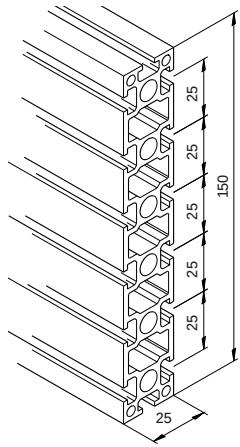

Profile mk 2025.04

25.04. ....*

3.75 kg/m
AlMgSi 0.5 F25

A	1389.10	mm^2
Ix	280.00	cm^4
Iy	9.60	cm^4
Wx	37.30	cm^3
Wy	7.70	cm^3

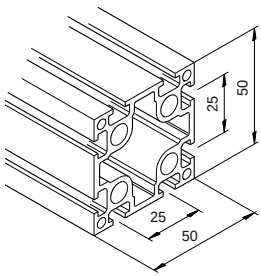

Profile mk 2025.05

25.05. ....*

2.20 kg/m
AlMgSi 0.5 F25

A	816.00	mm^2
Ix	22.30	cm^4
Iy	22.30	cm^4
Wx	8.90	cm^3
Wy	8.90	cm^3

....* Profile length in mm

Track Roller Assemblies

Calculations and System Selection

Selecting Series 40 Support Profiles

Calculations for maximum Stress and Deflection

Load at Center:
Maximum Stress

$$M_{bmax} = \frac{F \cdot L}{4} \qquad \sigma_b = \frac{M_{bmax}}{W_{x,y}} \qquad S = \frac{R_{p0.2}}{\sigma_b}$$

$R_{p0.2}$ = 195 N/mm² (AlMgSi 0.5 F25)

Maximum Deflection

$$d = \frac{F \cdot L^3}{48 \cdot E \cdot I_{x,y}}$$

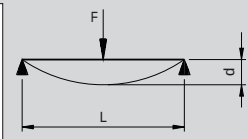

Uniform Load:
Maximum Stress

$$M_{bmax} = \frac{q \cdot L^2}{8} \qquad \sigma_b = \frac{M_{bmax}}{W_{x,y}} \qquad S = \frac{R_{p0.2}}{\sigma_b}$$

$R_{p0.2}$ = 195 N/mm² (AlMgSi 0.5 F25)

Maximum Deflection

$$d = \frac{5}{384} \cdot \frac{q \cdot L^4}{E \cdot I_{x,y}}$$

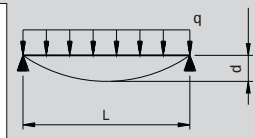

Graphical Selection

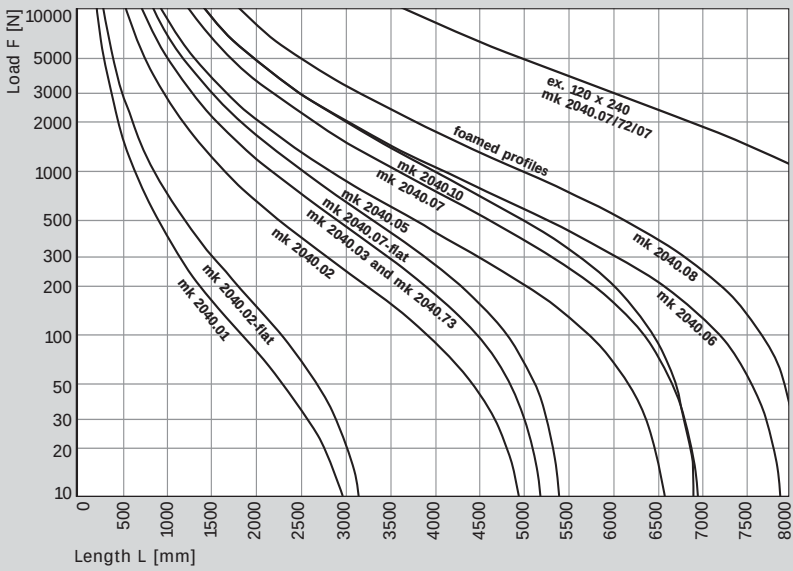

Application Diagram

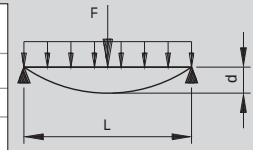

With point load at center and profile weight for the case:

$$\frac{d}{L} = \frac{1}{1000}$$

Example:
F = 300 N
L = 1500 mm
=> mk 2040.02-flat

with $\frac{d}{L} \leq \frac{1}{1000}$ is suitable

Support Profiles Series 40

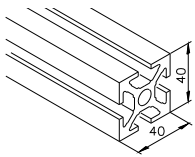

Profile mk 2040.01
54.01. ....*

2.00 kg/m
AlMgSi 0.5 F25
A 742.20 mm²
Ix 12.10 cm⁴
Iy 12.10 cm⁴
Wx 6.10 cm³
Wy 6.10 cm³

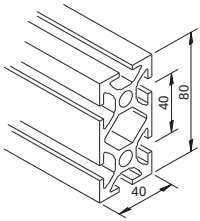

Profile mk 2040.02
54.02. ....*

3.60 kg/m
AlMgSi 0.5 F25
A 1340.90 mm²
Ix 83.30 cm⁴
Iy 22.60 cm⁴
Wx 20.80 cm³
Wy 11.30 cm³

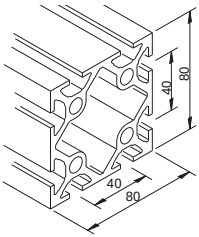

Profile mk 2040.03
54.03. ....*

5.60 kg/m
AlMgSi 0.5 F25
A 2062.20 mm²
Ix 149.60 cm⁴
Iy 149.60 cm⁴
Wx 37.40 cm³
Wy 37.40 cm³

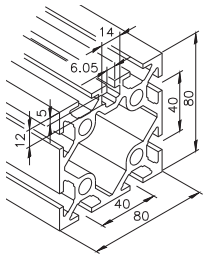

Profile mk 2040.73
54.73. ....*

5.70 kg/m
AlMgSi 0.5 F25
A 2110.00 mm²
Ix 150.00 cm⁴
Iy 150.00 cm⁴
Wx 37.10 cm³
Wy 37.10 cm³

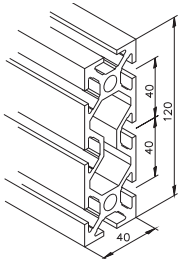

Profile mk 2040.05
54.05. ....*

4.70 kg/m
AlMgSi 0.5 F25
A 1738.60 mm²
Ix 256.60 cm⁴
Iy 31.60 cm⁴
Wx 43.80 cm³
Wy 15.80 cm³

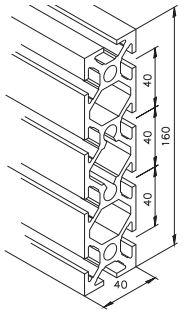

Profile mk 2040.06
54.06. ....*

6.30 kg/m
AlMgSi 0.5 F25
A 2318.90 mm²
Ix 576.10 cm⁴
Iy 41.40 cm⁴
Wx 72.00 cm³
Wy 20.70 cm³

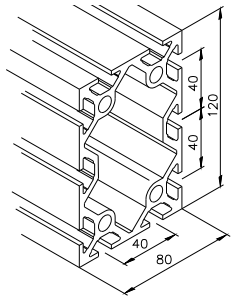

Profile mk 2040.07
54.07. ....*

7.00 kg/m
AlMgSi 0.5 F25
A 2579.30 mm²
Ix 440.70 cm⁴
Iy 208.50 cm⁴
Wx 73.40 cm³
Wy 52.10 cm³

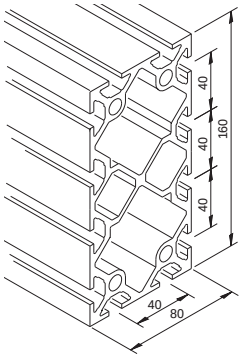

Profile mk 2040.08
54.08. ....*

9.50 kg/m
AlMgSi 0.5 F25
A 3504.90 mm²
Ix 948.90 cm⁴
Iy 272.10 cm⁴
Wx 118.60 cm³
Wy 68.00 cm³

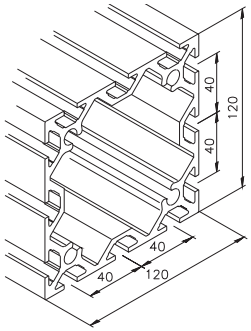

Profile mk 2040.10
54.10. ....*

8.30 kg/m
AlMgSi 0.5 F25
A 3058.60 mm²
Ix 585.20 cm⁴
Iy 585.20 cm⁴
Wx 97.50 cm³
Wy 97.50 cm³

....* Profile length in mm

Track Roller Assemblies

Calculations and System Selection

Selecting Series 50 Support Profiles

Calculations for maximum Stress and Deflection

Load at Center:
Maximum Stress

$$M_{bmax} = \frac{F \cdot L}{4} \qquad \sigma_b = \frac{M_{bmax}}{W_{x,y}} \qquad S = \frac{R_{p0.2}}{\sigma_b}$$

225 N/mm² (AlMgSi 0.7 F28)

Maximum Deflection

$$d = \frac{F \cdot L^3}{48 \cdot E \cdot I_{x,y}}$$

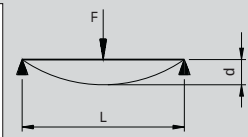

Uniform Load:
Maximum Stress

$$M_{bmax} = \frac{q \cdot L^2}{8} \qquad \sigma_b = \frac{M_{bmax}}{W_{x,y}} \qquad S = \frac{R_{p0.2}}{\sigma_b}$$

225 N/mm² (AlMgSi 0.7 F28)

Maximum Deflection

$$d = \frac{5}{384} \cdot \frac{q \cdot L^4}{E \cdot I_{x,y}}$$

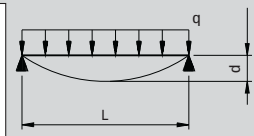

Graphical Selection

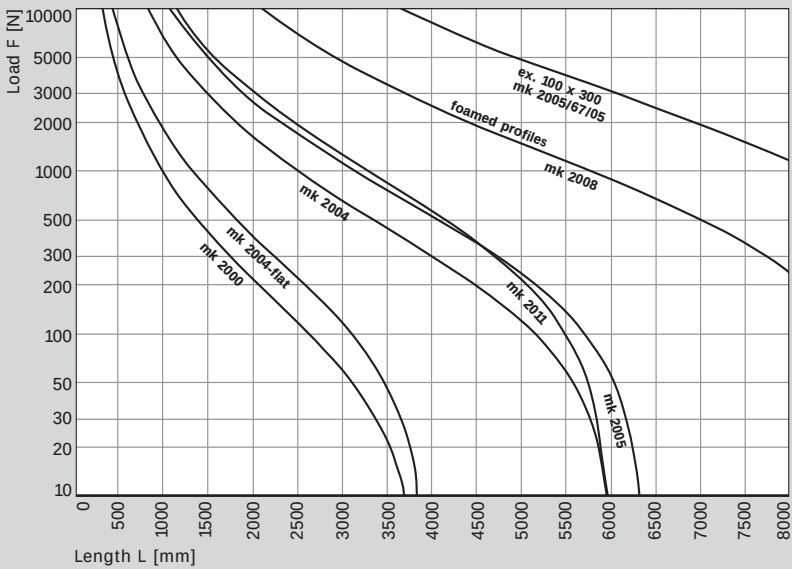

Application Diagram

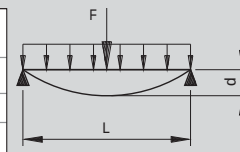

With point load at center and profile weight for the case:

$$\frac{d}{L} = \frac{1}{1000}$$

Example:
F = 400 N
L = 2000 mm
=> mk 2004-flat

with $\frac{d}{L} \leq \frac{1}{1000}$ is suitable

Support Profiles Series 50

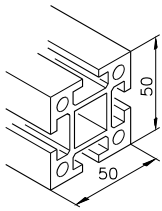

Profile mk 2000
51.00. ....*

2.85 kg/m
AlMgSi 0.7 F28
A 1084.20 mm^2
Ix 29.90 cm^4
Iy 29.90 cm^4
Wx 12.00 cm^3
Wy 12.00 cm^3

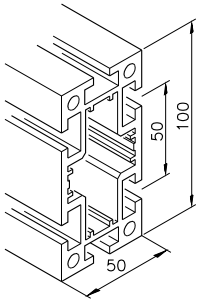

Profile mk 2004
51.04. ....*

4.90 kg/m
AlMgSi 0.7 F28
A 1805.50 mm^2
Ix 200.00 cm^4
Iy 55.40 cm^4
Wx 40.00 cm^3
Wy 22.20 cm^3

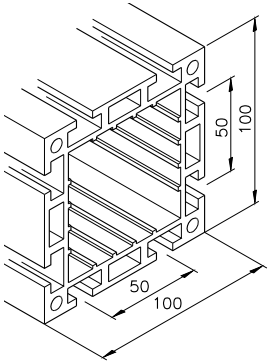

Profile mk 2005
51.05. ....*

7.00 kg/m
AlMgSi 0.7 F28
A 2655.50 mm^2
Ix 334.80 cm^4
Iy 334.80 cm^4
Wx 67.00 cm^3
Wy 67.00 cm^3

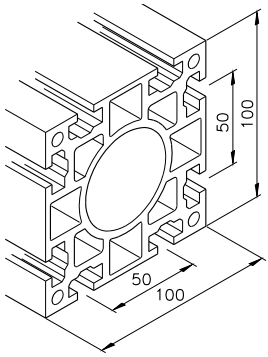

Profile mk 2011
51.11. ....*

9.70 kg/m
AlMgSi 0.7 F28
A 3671.30 mm^2
Ix 383.40 cm^4
Iy 383.40 cm^4
Wx 76.70 cm^3
Wy 76.70 cm^3

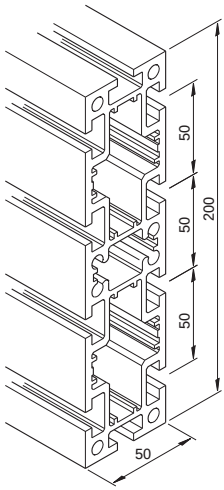

Profile mk 2008
51.08. ....*

9.00 kg/m
AlMgSi 0.7 F28
A 3366.40 mm^2
Ix 1302.50 cm^4
Iy 106.80 cm^4
Wx 130.20 cm^3
Wy 42.70 cm^3

....* Profile length in mm

Track Roller Assemblies

Calculations and System Selection

Selecting Series 60 Support Profiles

Calculations for maximum Stress and Deflection

Load at Center:
Maximum Stress

$$M_{bmax} = \frac{F \cdot L}{4} \qquad \sigma_b = \frac{M_{bmax}}{W_{x,y}} \qquad S = \frac{R_{p0.2}}{\sigma_b}$$

Maximum Deflection

$$d = \frac{F \cdot L^3}{48 \cdot E \cdot I_{x,y}}$$

$R_{p0.2}$ =
195 N/mm²
(AlMgSi 0.5 F25)

225 N/mm²
(AlMgSi 0.7 F28)

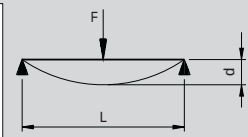

Uniform Load:
Maximum Stress

$$M_{bmax} = \frac{q \cdot L^2}{8} \qquad \sigma_b = \frac{M_{bmax}}{W_{x,y}} \qquad S = \frac{R_{p0.2}}{\sigma_b}$$

Maximum Deflection

$$d = \frac{5}{384} \cdot \frac{q \cdot L^4}{E \cdot I_{x,y}}$$

$R_{p0.2}$ =
195 N/mm²
(AlMgSi 0.5 F25)

225 N/mm²
(AlMgSi 0.7 F28)

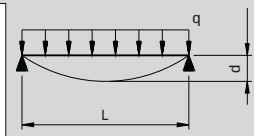

Graphical Selection

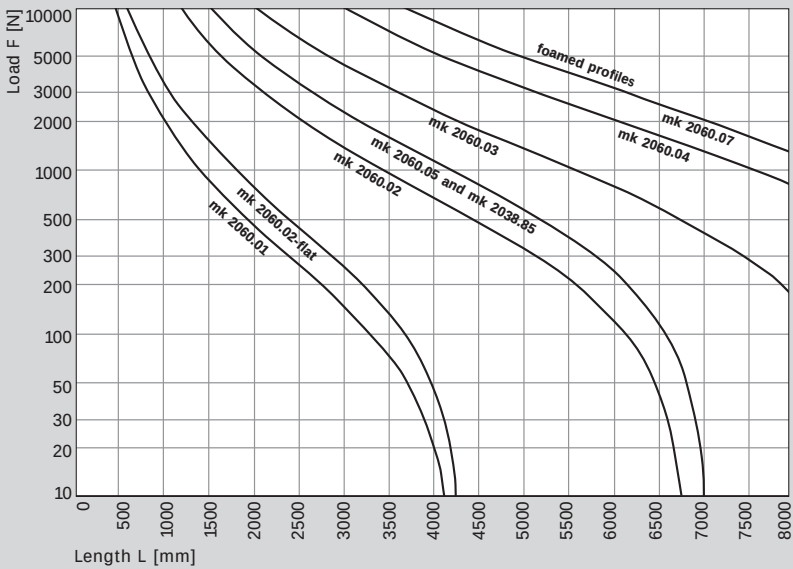

Application Diagram

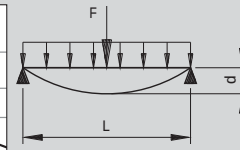

With point load at center and profile weight for the case:

$$\frac{d}{L} = \frac{1}{1000}$$

Example:
F = 800 N
L = 4500 mm
=> mk 2060.05

with $\frac{d}{L} \leq \frac{1}{1000}$

is suitable

Support Profiles Series 60

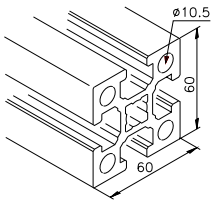

Profile mk 2060.01
60.01. ....*

4.30 kg/m
AlMgSi 0.7 F28
A 1596.60 mm²
Ix 60.20 cm⁴
Iy 60.20 cm⁴
Wx 20.10 cm³
Wy 20.10 cm³

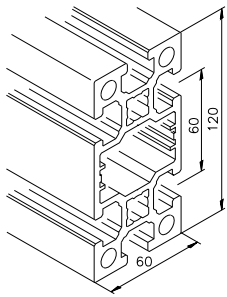

Profile mk 2060.02
60.02. ....*

6.95 kg/m
AlMgSi 0.7 F28
A 2574.30 mm²
Ix 404.40 cm⁴
Iy 103.50 cm⁴
Wx 67.30 cm³
Wy 34.50 cm³

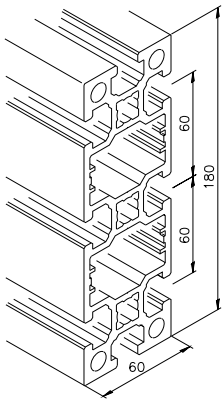

Profile mk 2060.03
60.03. ....*

9.60 kg/m
AlMgSi 0.7 F28
A 3544.40 mm²
Ix 1210.50 cm⁴
Iy 146.70 cm⁴
Wx 134.50 cm³
Wy 48.90 cm³

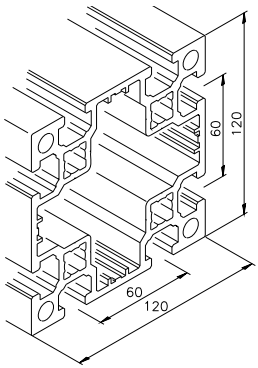

Profile mk 2060.05
60.05. ....*

10.30 kg/m
AlMgSi 0.7 F28
A 3800.70 mm²
Ix 659.90 cm⁴
Iy 659.90 cm⁴
Wx 109.90 cm³
Wy 109.90 cm³

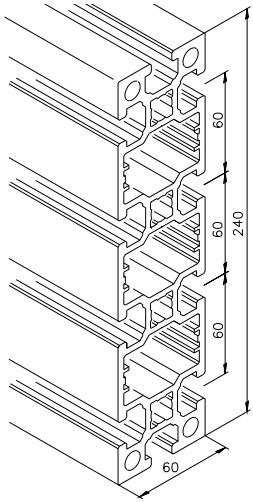

Profile mk 2060.04
60.04.....*

12.20 kg/m
AlMgSi 0.7 F28
A 4515.90 mm²
Ix 2657.20 cm⁴
Iy 189.90 cm⁴
Wx 221.20 cm³
Wy 63.30 cm³

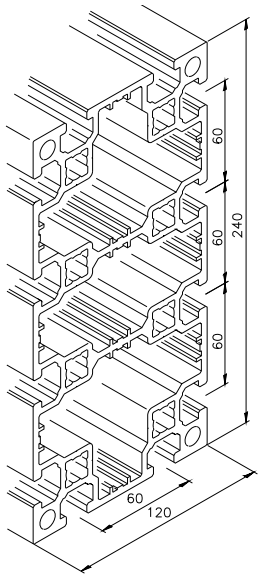

Profile mk 2060.07
60.07. ....*

18.00 kg/m
AlMgSi 0.5 F25
A 6700.20 mm²
Ix 4086.10 cm⁴
Iy 1177.40 cm⁴
Wx 340.50 cm³
Wy 169.20 cm³

....* Profile length in mm

Selection Track Rollers

Selection

The indicated static load carrying capacities may be used as a guideline for the preliminary selection of track rollers and carriages. These values are the maximum allowable unit loads and contain a static safety factor s_0 = 4 against plastic deformation of the raceways and rolling elements. **For stainless steel rollers, these values must be reduced by 30%.**

The load values shown for axial load (F_y) and radial load (F_z) are for moment-free loads. The allowable moments are the result of opposing offset loads.

Combined loads must be verified separately. A combined load is a single point load which, with a 50 mm offset for example, also introduces a moment. Careful consideration must be given to combined loads which cause torsion.

When arranging track rollers, it is important that the track rollers only transfer compressive loads in the radial direction. The centric track rollers are especially suited for handling compressive loads in the Fz direction. The centric track rollers are prevented from twisting by use of a steel bushing.

Application notes

Care must be taken that the track rollers are installed in an unloaded condition. In most cases, re-adjustment of the excentric rollers under load causes premature abrasion. For “normal” applications (to a = 3 m/s^2) the track rollers should be installed so that they rotate as they travel along the track, yet that you can still prevent this rotation by placing your thumb and index finger on the perimeter of the roller. For applications requiring a speed of over a = 3 m/s^2 the track rollers require further preloading, so that one can no longer manually prevent the rollers from rotating.

As an additional safety measure we recommend securing the excentric bushings with adhesive in order to prevent them from slipping. Sufficient lubrication, to prevent corrosion and increased abrasion, must also be used.

Calculations

When confirming the suitability of particular track rollers a distinction must be made between the static and the dynamic loading. Static loads are loads which are transferred at the contact point between the rod and the track roller while the roller is not rotating. That is to say that dynamic loads, or loads along other axes, must also be considered.

It makes sense to confirm first the static, then the dynamic load calculations. The allowable static axial and radial roller loads, as well as the static and dynamic safety factors of the highest loaded rollers, must be confirmed. The maximum track roller loads are technically considered mechanical contact loads (supported loads).

The static and the dynamic safety factor is derived from the relationship between the allowable load capacity C_W and the available equivalent load P.

As Guidelines we recommend

To v = 3m/s and a = 3 m/s^2 full load capacity of the track rollers with $s_O \geq 4$ and $2 < s_D \leq 5$.
For high dynamic loads with a > 10 m/s^2 and speeds to v = 10m/s the load values must be reduced.

Technical details for Track Roller Assemblies

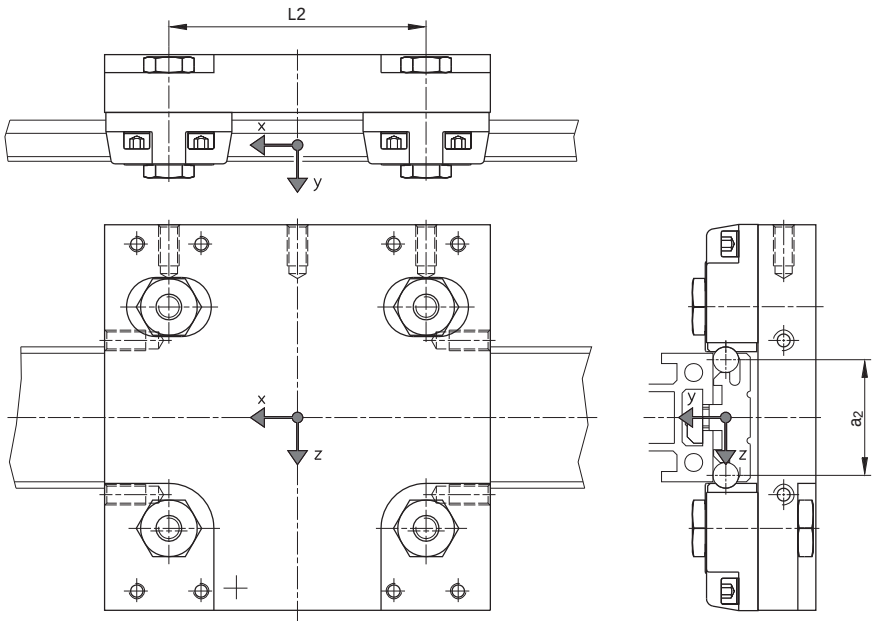

Static Safety Factor:

$s_o = \frac{C_{ow}}{P_o} \geq 4 = s_o$ recomm.

Dynamic Safety Factor:

$s_D = \frac{C_w}{P} \geq 5 = s_D$ recomm.

Nominal Life Expectancy:

$L_h = \left(\frac{C_w}{P}\right)^3$ [10^5 m]

Equivalent Loads

– static:

$P_o = x_o \cdot F_{ro} + y_o \cdot F_{ao}$ [N]

– dynamic:

$P = x \cdot F_r + y \cdot F_a$ [N]

Factors from the Table

– static: roller at rest

– dynamic: roller rotating

Track Roller Loads

– radial:

$F_{r(o)} = \pm \frac{F_{z(o)}}{2} \pm \frac{M_{y(o)}}{L_2}$ [N]

– axial:

$F_{a(o)} = \pm \frac{F_{y(o)}}{4} \pm \frac{M_{x(o)}}{2 \cdot a_2} \pm \frac{M_{z(o)}}{2 \cdot L_2}$ [N]

Highest loaded roller, i.e. respectively largest value

Load data

Ident-No.	Description Track with	Rod ø	$F_{ro\text{-}max}$ [N]	$F_{ao\text{-}max}$ [N]	$F_{r(o)} \geq F_{a(o)}$				$F_{r(o)} < F_{a(o)}$				C_{ow} [N]	C_w [N] limited to 10^5 m
					x_o	y_o	x	y	x_o	y_o	x	y		
K101100003	LR 6	6	175	60	1.2	3.6	1.0	3.1	0.9	3.6	0.5	3.9	890	1270
K101100001	LR 10	10	1000	300	1.2	4.0	1.0	3.4	0.9	4.0	0.5	4.3	5100	8500
K101100002	LR 16	16	2000	500	1.2	4.8	1.0	3.9	1.0	5.0	0.5	4.8	9500	16800
K101100006	LR 20	20	3250	825	1.2	4.9	1.0	4.0	1.1	5.0	0.5	4.9	16600	29500

Track Roller Assemblies

Linear Assemblies

Profile Track Series 25

Profile Track PF 6-38.20/50

The Profile Track PF 6-38.20 with or without adapter profile, can be combined with Series 25 profiles and the carriages shown on the next page. Together they result in a linear assembly.

Ident-No.	**B5104.025**	**B5104.029**
Description	PF 6-38.20	PF 6-38.20/50
L1 [mm]	to 6000	to 6000
m_{Track} [kg/m]	1.5	2.0

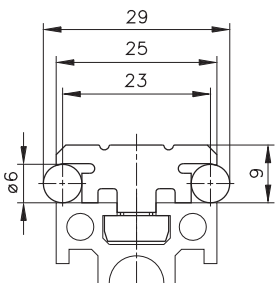

Profile Track
PF 6-38.20

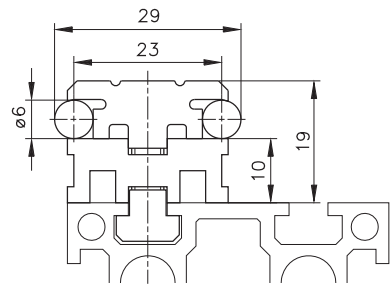

Profile Track
PF 6-38.20/50
with Adapter Profile

Hole Spacing

Range: $75 \leq L1 \leq 6000$

$12.5 \leq A < 37.5$

$$N = \frac{L1-(2 \times A)}{50} + 1$$

L1 = Length of Profile Track
A = Distance to first hole
N = Number of screws

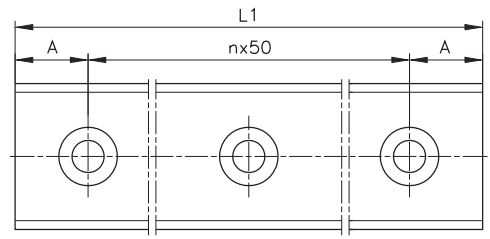

Carriages LW 38.20-04 **for Profile Track PF 6-38.20/50**

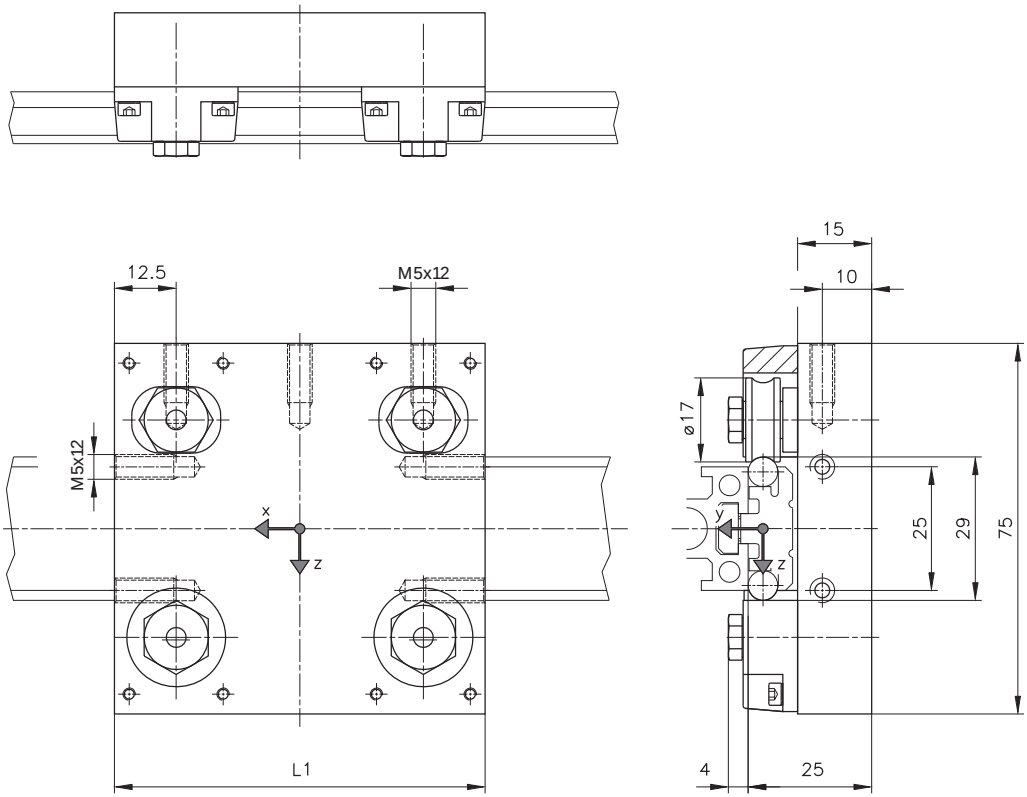

Technical Data

Ident-No.	Description	L1 [mm]	F_{y0} [N]	F_{z0} [N]	M_{x0} [Nm]	M_{y0} [Nm]	M_{z0} [Nm]	$m_{Carriage}$ [kg]	Plate only
B90.25.041	LW 38.20-04	75	200	350	2.5	8.5	5	0.35	5009CA0075
B90.25.041	LW 38.20-04	100	200	350	2.5	13	8.0	0.43	5009CA0100

- max. loads for $v \leq 10$ m/s and $a \leq 10$ m/s²; with $s_0 = 4$
- max. acceleration a = 50 m/s² with reduced load
- max. load offset from center 15 mm
- for X46 Cr13 rods and track rollers load capacities reduced by 30%

Track Roller Assemblies

Linear Assemblies

Profile Track Series 25

Profile Track PF 6-38.21/51

The Profile Track PF 6-38.21 with or without adapter profile, can be combined with Series 25 profiles and the carriages shown on the next page. Together they result in a linear assembly.

Ident-No.	**B5104.030**	**B5104.031**
Description	PF 6-38.21	PF 6-38.21/51
L1 [mm]	to 6000	to 6000
m_{Track} [kg/m]	2.0	3.0

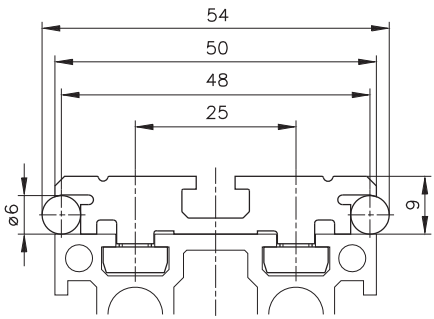

Profile Track
PF 6-38.21

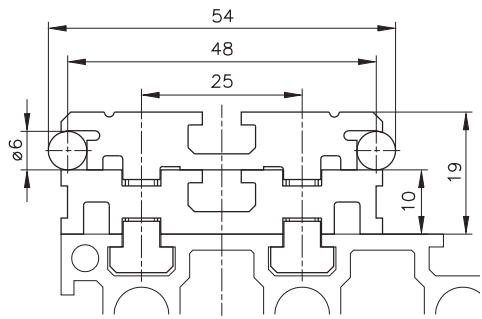

Profile Track
PF 6-38.21/51
with Adapter Profile

Hole Spacing

Range: $100 \leq L1 \leq 6000$

$12.5 \leq A < 50$

$$N = \left(\frac{L1-(2 \times A)}{75} + 1\right) \times 2$$

L1 = Length of Profile Track
A = Distance to first hole
N = Number of screws

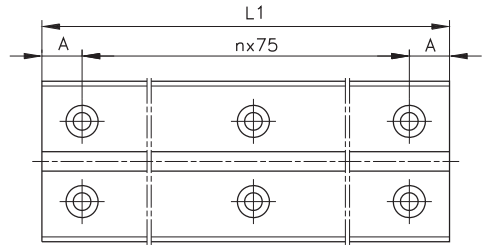

Carriages LW 38.21-04 **for Profile Track PF 6-38.21/51**

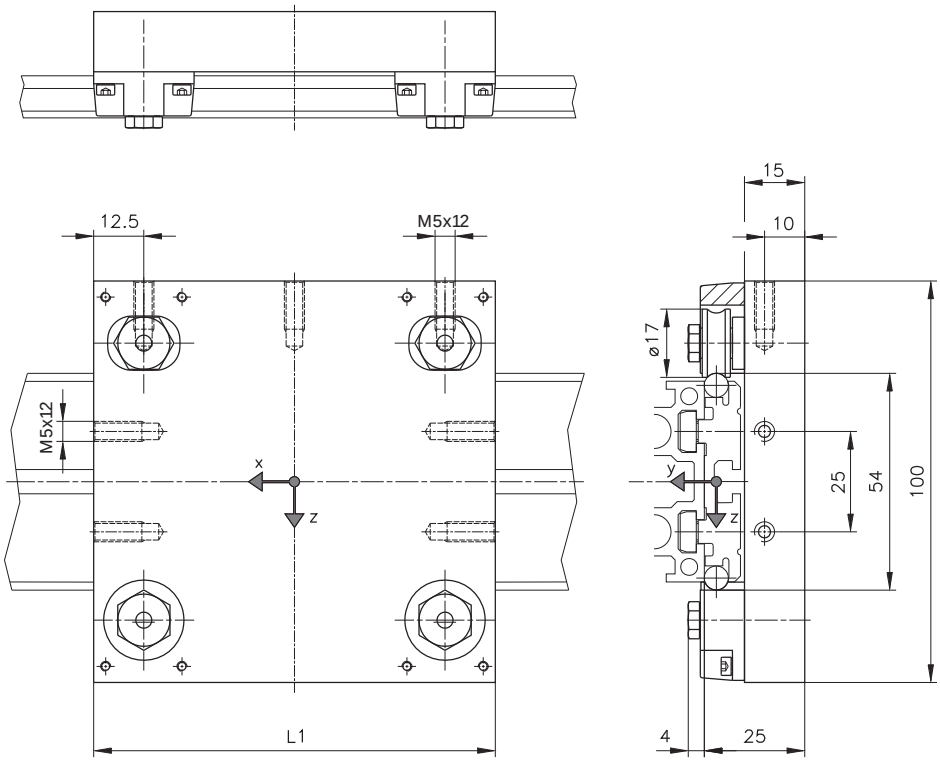

Technical Data

Ident-No.	Description	L1 [mm]	F_{y0} [N]	F_{z0} [N]	M_{x0} [Nm]	M_{y0} [Nm]	M_{z0} [Nm]	$m_{Carriage}$ [kg]	Plate only
B90.25.042	LW 38.21-04	100	200	350	5.0	13	8.0	0.55	5009CB0100
B90.25.042	LW 38.21-04	150	200	350	5.0	21	13	0.75	5009CB0150

- max. loads for $v \leq 10$ m/s and $a \leq 10$ m/s²; with $s_0 = 4$
- max. acceleration a = 50 m/s² with reduced load
- max. load offset from center 15 mm
- for X46 Cr13 rods and track rollers load capacities reduced by 30%

Track Roller Assemblies

Linear Assemblies

Profile Track Series 40

Profile Track PF 6-38.30/55

The Profile Track PF 6-38.30 with or without adapter profile, can be combined with Series 40 profiles and the carriages shown on the next page. Together they result in a linear assembly.

Ident-No.	**B5104.042**	**B5104.043**
Description	PF 6-38.30	PF 6-38.30/55
L1 [mm]	to 6000	to 6000
m_{Track} [kg/m]	1.8	2.6

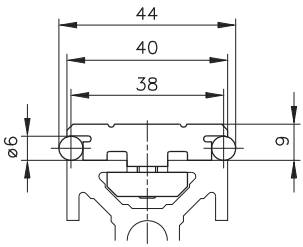

Profile Track
PF 6-38.30

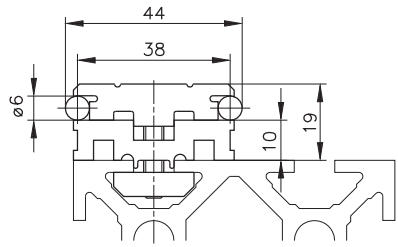

Profile Track
PF 6-38.30/55
with Adapter Profile

Hole Spacing

Range: 75 ≤ L1 ≤ 6000

12.5 ≤ A < 37.5

$$N = \frac{L1-(2 \times A)}{50} + 1$$

L1 = Length of Profile Track
A = Distance to first hole
N = Number of screws

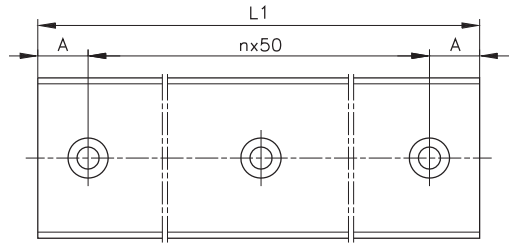

Carriages LW 38.30-04 **for Profile Track PF 6-38.30/55**

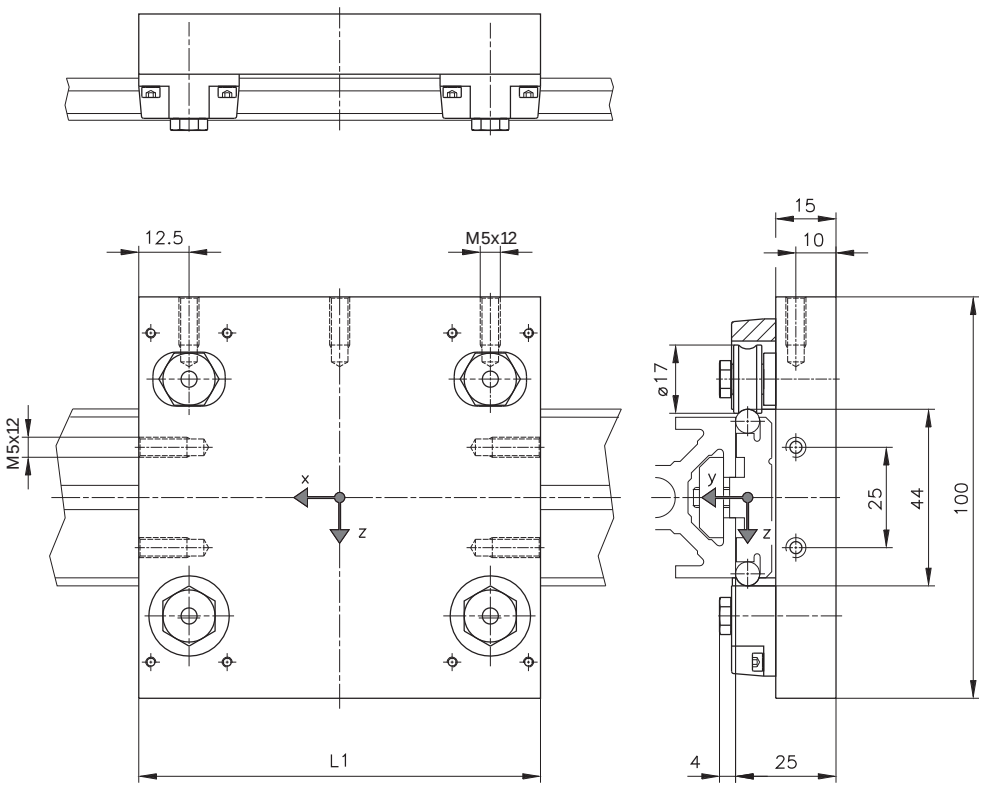

Technical Data

Ident-No.	Description	L1 [mm]	F_{y0} [N]	F_{z0} [N]	M_{x0} [Nm]	M_{y0} [Nm]	M_{z0} [Nm]	$m_{Carriage}$ [kg]	Plate only
B90.40.041	LW 38.30-04	100	200	350	4.0	13	8.0	0.55	5009CC0100
B90.40.041	LW 38.30-04	160	200	350	4.0	23	14	0.80	5009CC0160

- max. loads for $v \leq 10$ m/s and $a \leq 10$ m/s²; with $s_0 = 4$
- max. acceleration a = 50 m/s² with reduced load
- max. load offset from center 15 mm
- for X46 Cr13 rods and track rollers load capacities reduced by 30%

Track Roller Assemblies

Linear Assemblies

Profile Track Series 40

Profile Track PF 10-38.31/55

The Profile Track PF 10-38.31 with or without adapter profile, can be combined with Series 40 profiles and the carriages shown on the next page. Together they result in a linear assembly.

Ident-No.	**B51.04.046**	**B51.04.047**
Description	PF 10-38.31	PF 10-38.31/55
L1 [mm]	to 6000	to 6000
m_{Track} [kg/m]	2.8	3.6

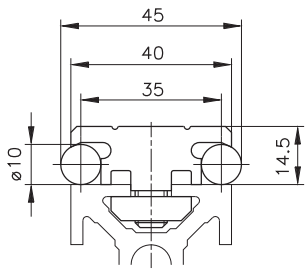

Profile Track
PF 10-38.31

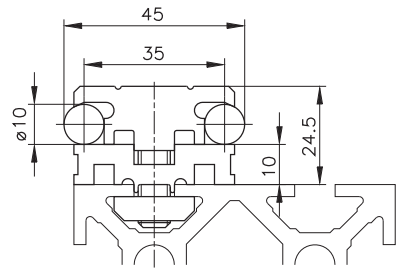

Profile Track
PF 10-38.31/55
with Adapter Profile

Hole Spacing

Range: $150 \leq L1 \leq 6000$

$25 \leq A < 75$

$$N = \frac{L1-(2 \times A)}{100}+1$$

L1 = Length of Profile Track
A = Distance to first hole
N = Number of screws

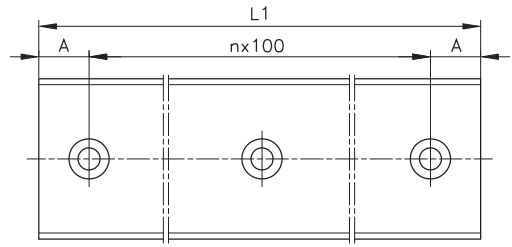

Carriages LW 38.31-04 **for Profile Track PF 10-38.31/55**

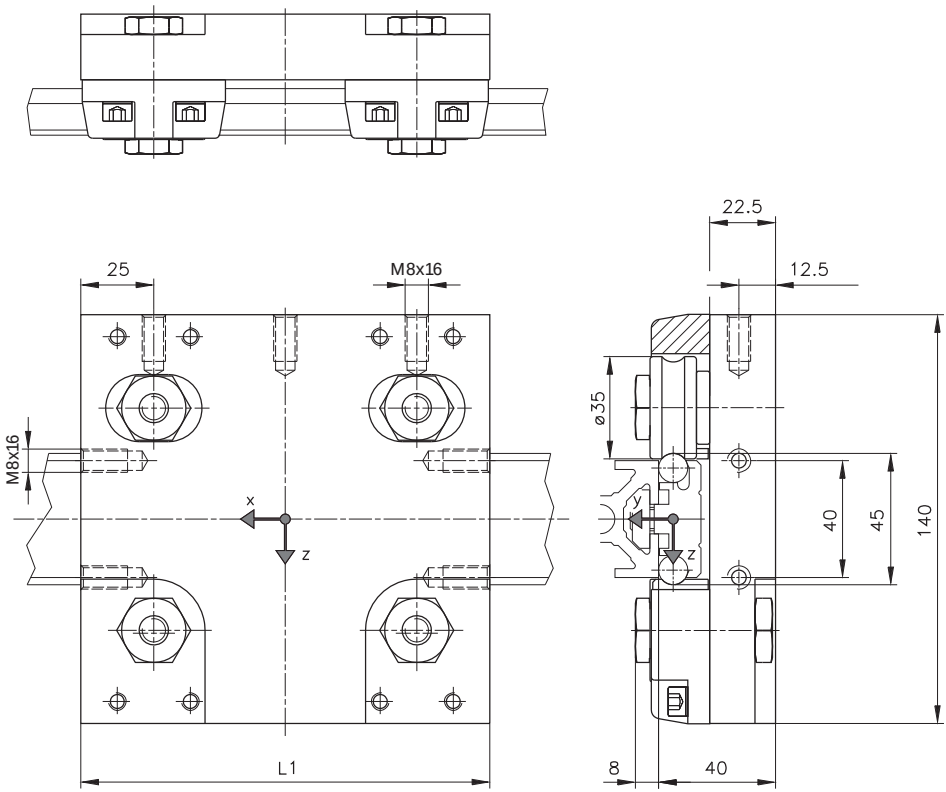

Technical Data

Ident-No.	Description	L1 [mm]	F_{y0} [N]	F_{z0} [N]	M_{x0} [Nm]	M_{y0} [Nm]	M_{z0} [Nm]	$m_{Carriage}$ [kg]	Plate only
B90.40.042	LW 38.31-04	140	1000	2000	18	90	45	2.0	5009CD0140
B90.40.042	LW 38.31-04	240	1000	2000	18	190	95	2.8	5009CD0240

- max. loads for $v \leq 10$ m/s and $a \leq 10$ m/s²; with $s_0 = 4$
- max. acceleration a = 50 m/s² with reduced load
- max. load offset from center 25 mm
- for X46 Cr13 rods and track rollers load capacities reduced by 30%

Track Roller Assemblies

Linear Assemblies

Profile Track Series 40

Profile Track PF 10-38.32/56

The Profile Track PF 10-38.32 with or without adapter profile, can be combined with Series 40 profiles and the carriages shown on the next page. Together they result in a linear assembly.

Ident-No.	**B5104.048**	**B5104.049**
Description	PF 10-38.32	PF 10-38.32/56
L1 [mm]	to 6000	to 6000
m_{Track} [kg/m]	4.0	5.8

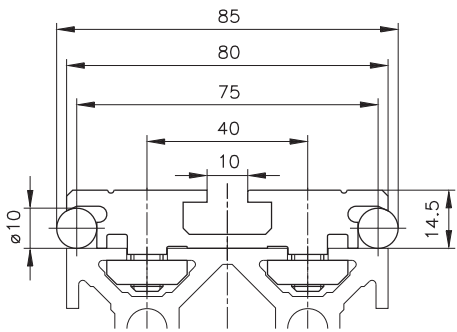

Profile Track
PF 10-38.32

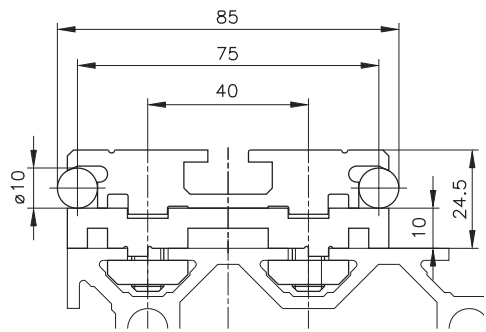

Profile Track
PF 10-38.32/56
with Adapter Profile

Hole Spacing

Range: 200 ≤ L1 ≤ 6000

25 ≤ A < 100

$$N = \left(\frac{L1-(2 \times A)}{150} + 1\right) \times 2$$

L1 = Length of Profile Track
A = Distance to first hole
N = Number of screws

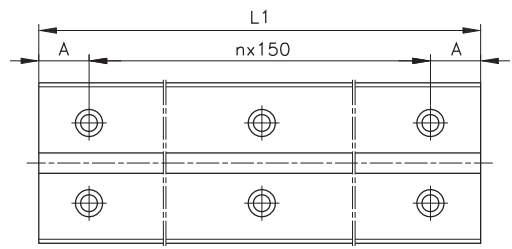

Carriages LW 38.32-04 **for Profile Track PF 10-38.32/56**

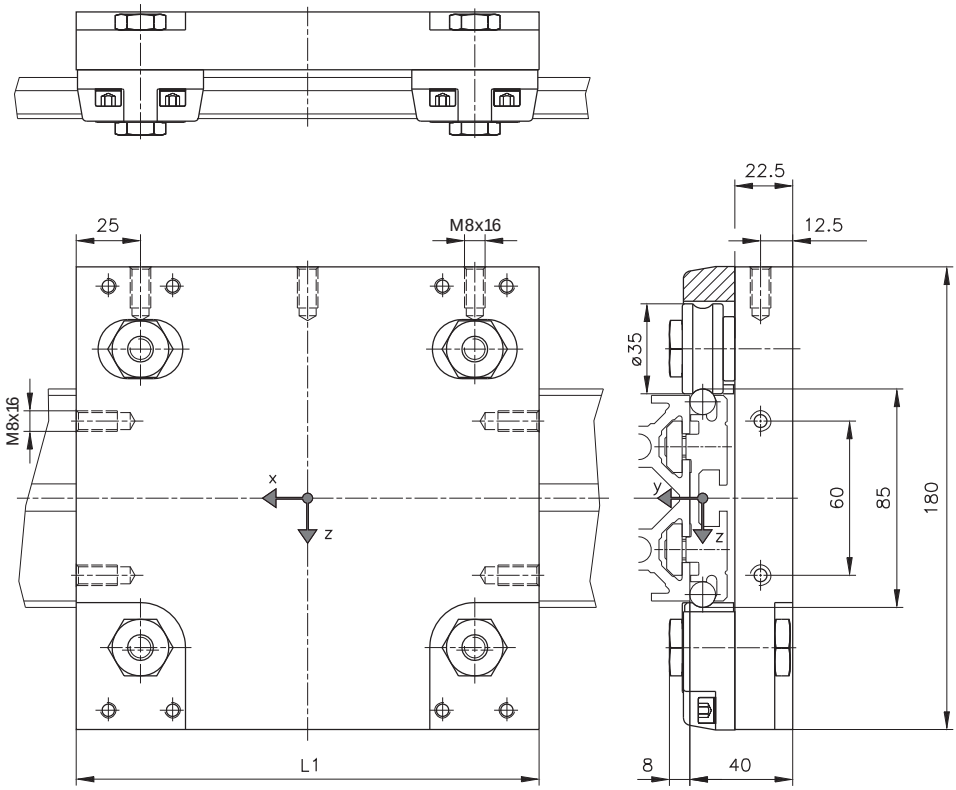

Technical Data

Ident-No.	Description	L1 [mm]	F_{y0} [N]	F_{z0} [N]	M_{x0} [Nm]	M_{y0} [Nm]	M_{z0} [Nm]	$m_{Carriage}$ [kg]	Plate only
B90.40.043	LW 38.32-04	180	1000	2000	40	130	65	2.8	5009CE0180
B90.40.043	LW 38.32-04	280	1000	2000	40	230	115	3.8	5009CE0280

- max. loads for $v \leq 10$ m/s and $a \leq 10$ m/s²; with $s_0 = 4$
- max. acceleration a = 50 m/s² with reduced load
- max. load offset from center 25 mm
- for X46 Cr13 rods and track rollers load capacities reduced by 30%

Track Roller Assemblies

Linear Assemblies

Profile Track Series 40

Profile Track PF 16-38.33/56

The Profile Track PF 16-38.33 with or without adapter profile, can be combined with Series 40 profiles and the carriages shown on the next page. Together they result in a linear assembly.

Ident-No.	**B5104.052**	**B5104.053**
Description	PF 16-38.33	PF 16-38.33/56
L1 [mm]	to 6000	to 6000
m_{Track} [kg/m]	7.0	8.8

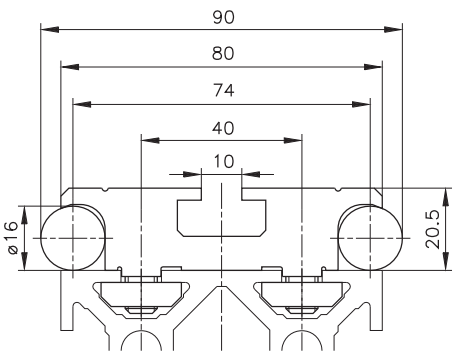

Profile Track
PF 16-38.33

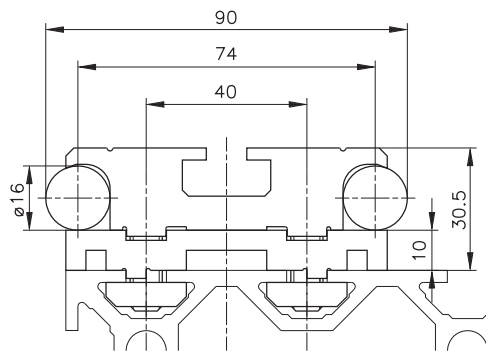

Profile Track
PF 16-38.33/56
with Adapter Profile

Hole Spacing

Range: 150 ≤ L1 < 450	450 ≤ L1 < 6000
25 ≤ A < 75	125 ≤ A < 225
$N = \left(\frac{L1-(2 \times A)}{100}+1\right) \times 2$	$N = \left(\frac{L1-(2 \times A)}{200}+3\right) \times 2$

L1 = Length of Profile Track
A = Distance to first hole
N = Number of screws

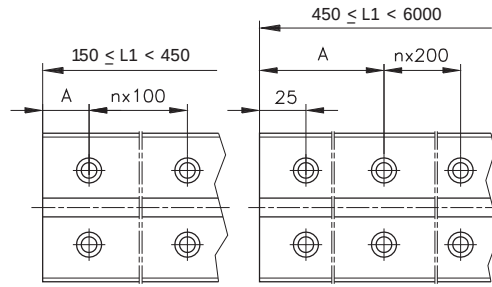

Carriages LW 38.33-04 **for Profile Track PF 16-38.33/56**

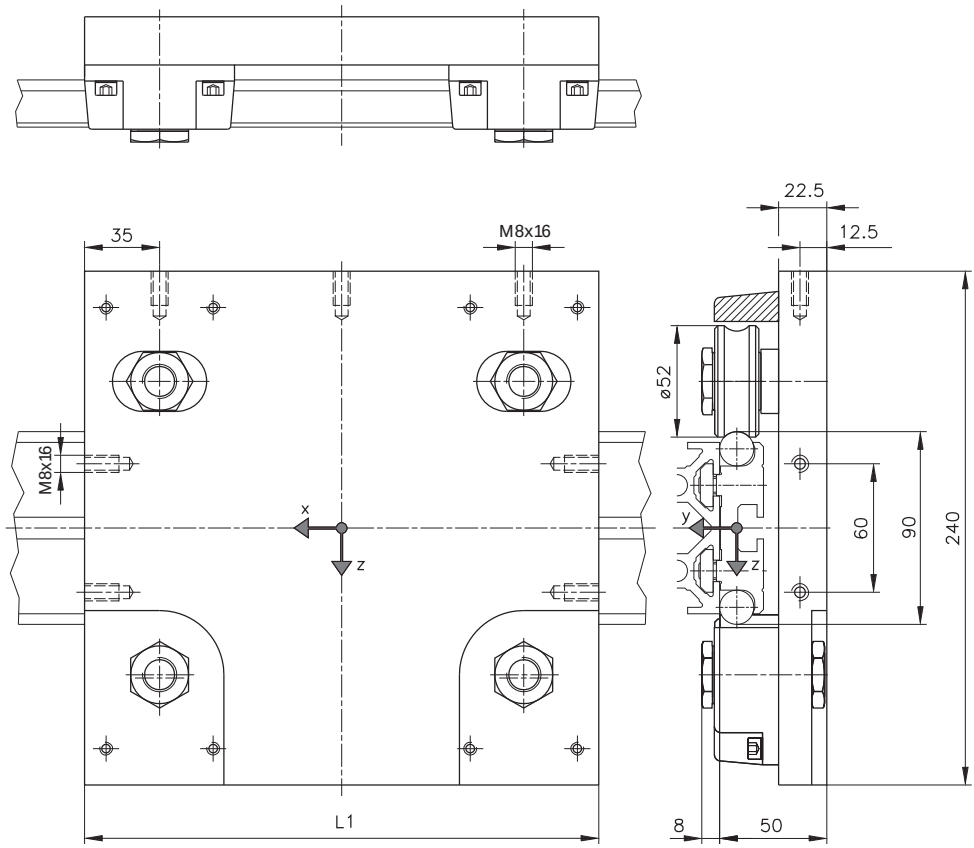

Technical Data

Ident-No.	Description	L1 [mm]	F_{y0} [N]	F_{z0} [N]	M_{x0} [Nm]	M_{y0} [Nm]	M_{z0} [Nm]	$m_{Carriage}$ [kg]	Plate only
B90.40.044	LW 38.33-04	240	1600	4000	60	340	140	5.5	5009CF0240
B90.40.044	LW 38.33-04	400	1600	4000	60	660	260	8.0	5009CF0400

- max. loads for $v \leq 10$ m/s and $a \leq 10$ m/s²; with $s_0 = 4$
- max. acceleration a = 50 m/s² with reduced load
- max. load offset from center 30 mm
- for X46 Cr13 rods and track rollers load capacities reduced by 30%

Track Roller Assemblies

Linear Assemblies

Profile Track Series 40

Interior Profile Track PF 6-38.75

The Profile Track PF 6-38.75, can be combined with the carriage shown on the next page. Together they result in a linear assembly.

Ident-No.	**B51.04.140**
Description	PF 6-38.75
L1 [mm]	to 6000
m_{Track} [kg/m]	3.9

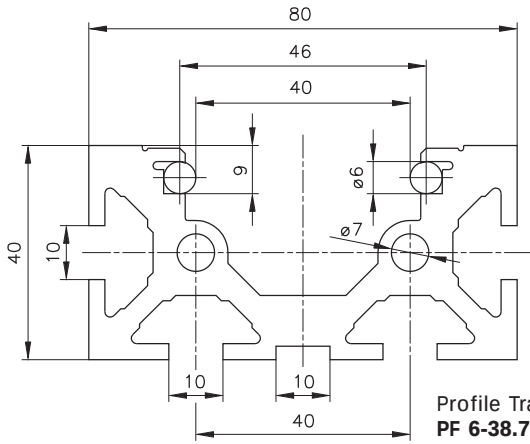

Profile Track
PF 6-38.75

Carriages LW 38.75-44 **for Profile Track PF 6-38.75**

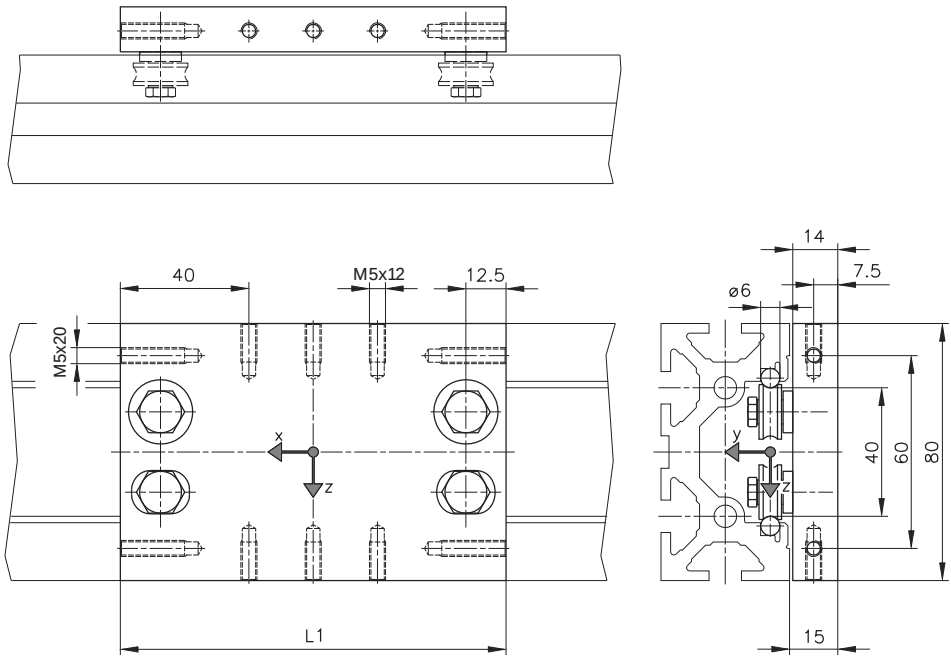

Technical Data

Ident-No.	Description	L1 [mm]	F_{y0} [N]	F_{z0} [N]	M_{x0} [Nm]	M_{y0} [Nm]	M_{z0} [Nm]	$m_{Carriage}$ [kg]	Plate only
B90.40.441	LW 38.75-44	120	200	350	5.0	15	10	0.50	5009CN0120

- max. loads for v ≤ 10 m/s and a ≤ 10 m/s²; with s_0 = 4
- max. acceleration a = 50 m/s² with reduced load
- max. load offset from center 15 mm
- for X46 Cr13 rods and track rollers load capacities reduced by 30%

Track Roller Assemblies

Linear Assemblies

Profile Track Series 40

Interior Profile Track PF 10-38.77

The Profile Track PF 10-38.77, can be combined with the carriage shown on the next page. Together they result in a linear assembly.

Ident-No.	**B51.04.142**
Description	PF 10-38.77
L1 [mm]	to 6000
m_{Track} [kg/m]	5.6

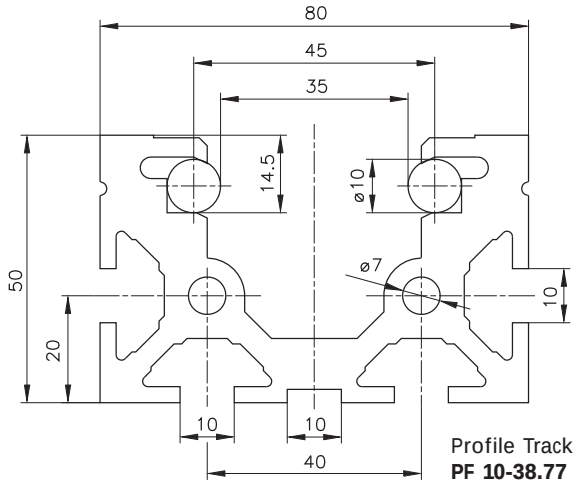

Profile Track
PF 10-38.77

Carriages LW 38.77-44 **for Profile Track PF 10-38.77**

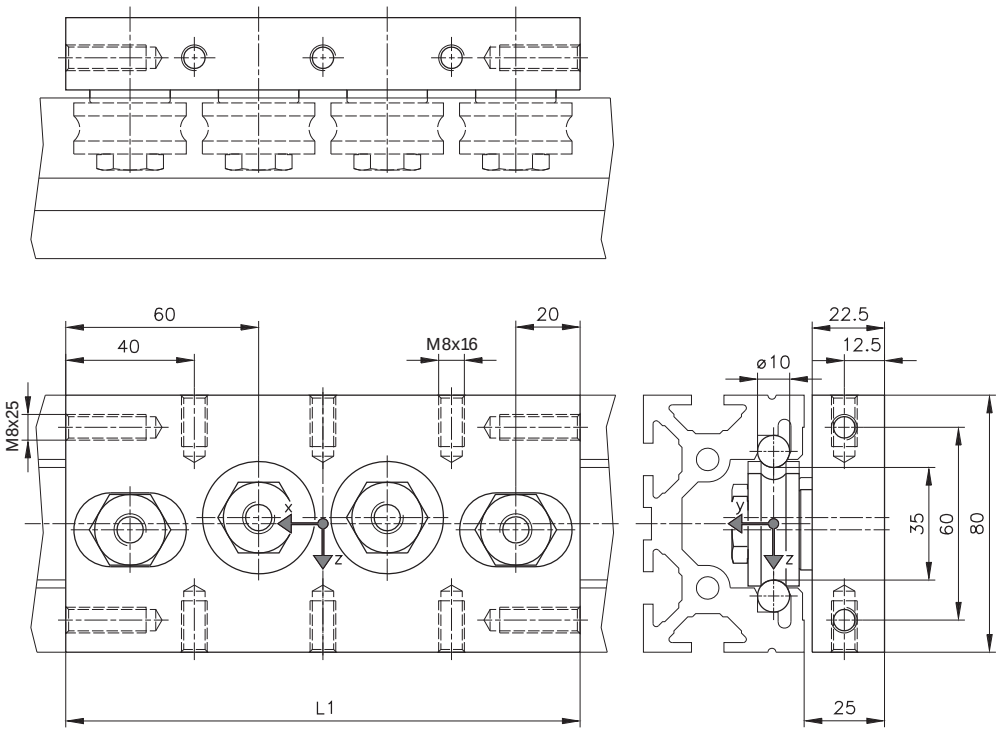

Technical Data

Ident-No.	Description	L1 [mm]	F_{y0} [N]	F_{z0} [N]	M_{x0} [Nm]	M_{y0} [Nm]	M_{z0} [Nm]	$m_{Carriage}$ [kg]	Plate only
B90.40.443	LW 38.77-44	160	1000	1500	20	60	40	1.5	5009CO0160

- max. loads for $v \leq 10$ m/s and $a \leq 10$ m/s²; with $s_0 = 4$
- max. acceleration a = 50 m/s² with reduced load
- max. load offset from center 25 mm
- for X46 Cr13 rods and track rollers load capacities reduced by 30%

Track Roller Assemblies

Linear Assemblies

Profile Track Series 50

Profile Track PF 10-38.41/60

The Profile Track PF 10-38.41 with or without adapter profile, can be combined with Series 50 profiles and the carriages shown on the next page. Together they result in a linear assembly.

Ident-No.	**B5104.020**	**B5104.015**
Description	PF 10-38.41	PF 10-38.41/60
L1 [mm]	to 6000	to 6000
m_{Track} [kg/m]	3.0	4.2

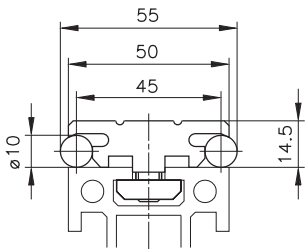

Profile Track
PF 10-38.41

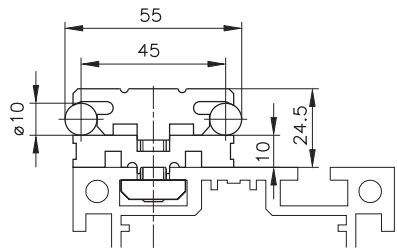

Profile Track
PF 10-38.41/60
with Adapter Profile

Hole Spacing

Range: $150 \leq L1 \leq 6000$

$25 \leq A < 75$

$$N = \frac{L1-(2 \times A)}{100} + 1$$

L1 = Length of Profile Track
A = Distance to first hole
N = Number of screws

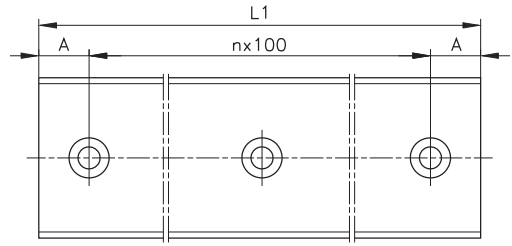

Carriages LW 38.41-04 **for Profile Track PF 10-38.41/60**

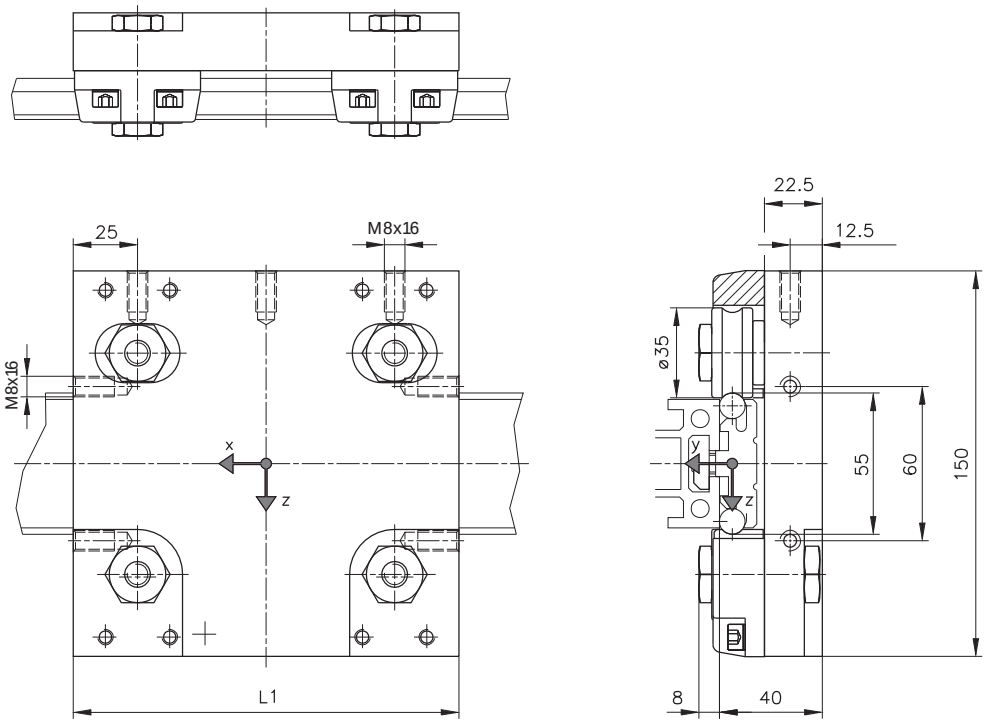

Technical Data

Ident-No.	Description	L1 [mm]	F_{y0} [N]	F_{z0} [N]	M_{x0} [Nm]	M_{y0} [Nm]	M_{z0} [Nm]	$m_{Carriage}$ [kg]	Plate only
B90.50.042	LW 38.41-04	150	1000	2000	25	100	50	2.2	5009CG0150
B90.50.042	LW 38.41-04	250	1000	2000	25	200	100	3.0	5009CG0250

- max. loads for v ≤ 10 m/s and a ≤ 10 m/s²; with s_0 = 4
- max. acceleration a = 50 m/s² with reduced load
- max. load offset from center 25 mm
- for X46 Cr13 rods and track rollers load capacities reduced by 30%

Track Roller Assemblies

Linear Assemblies

Profile Track Series 50

Profile Track PF 16-38.44/61

The Profile Track PF 16-38.44 with or without adapter profile, can be combined with Series 50 profiles and the carriages shown on the next page. Together they result in a linear assembly.

Ident-No.	**B5104.004**	**B5104.016**
Description	PF 16-38.44	PF 16-38.44/61
L1 [mm]	to 6000	to 6000
m_{Track} [kg/m]	6.8	8.8

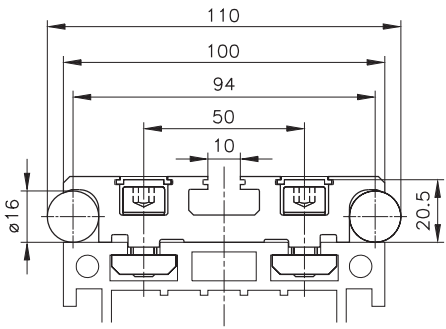

Profile Track
PF 16-38.44

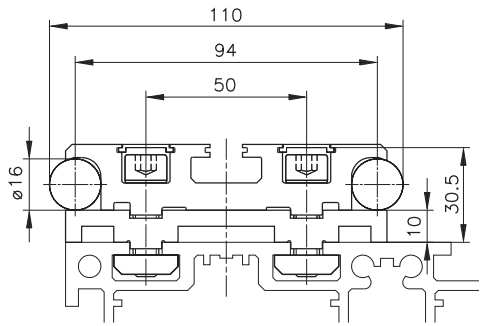

Profile Track
PF 16-38.44/61
with Adapter Profile

Hole Spacing

Range: 150 ≤ L1 < 450	450 ≤ L1 < 6000
25 ≤ A < 75	125 ≤ A < 225
$N = \left(\frac{L1-(2 \times A)}{100}+1\right) \times 2$	$N = \left(\frac{L1-(2 \times A)}{200}+3\right) \times 2$

L1 = Length of Profile Track
A = Distance to first hole
N = Number of screws

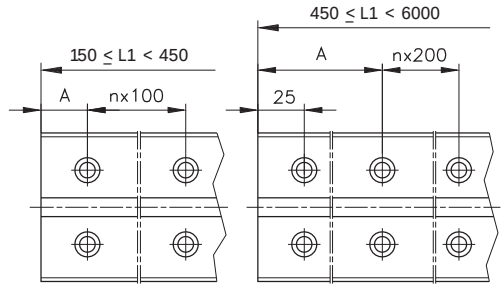

Carriages LW 38.44-04 **for Profile Track PF 16-38.44/61**

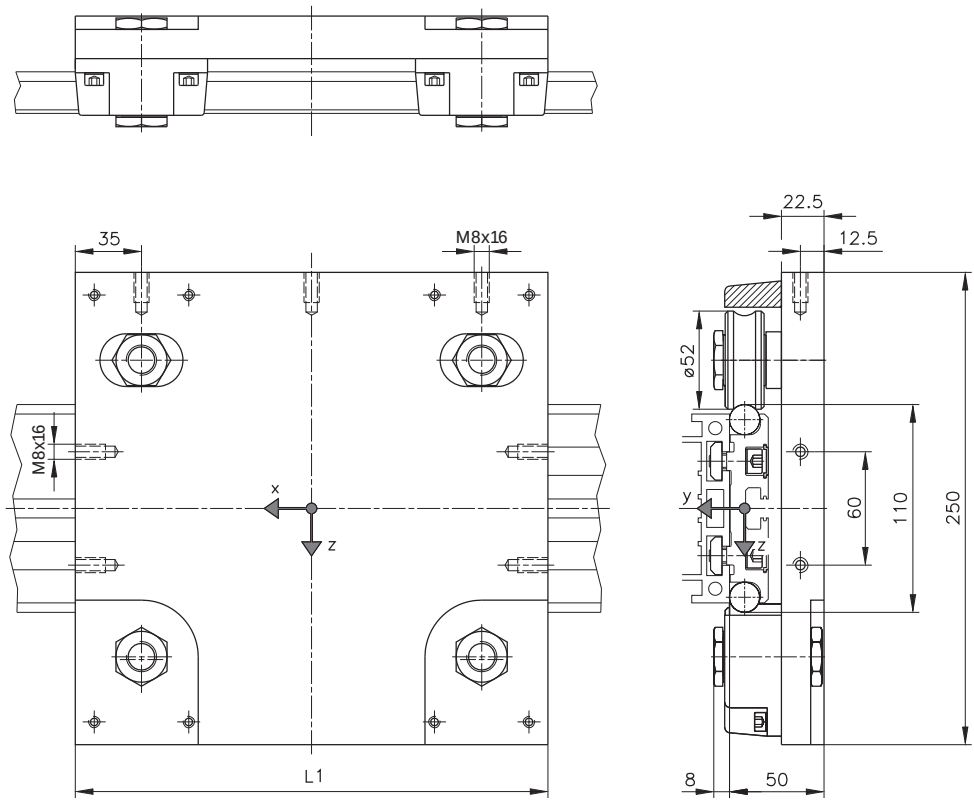

Technical Data

Ident-No.	Description	L1 [mm]	F_{y0} [N]	F_{z0} [N]	M_{x0} [Nm]	M_{y0} [Nm]	M_{z0} [Nm]	$m_{Carriage}$ [kg]	Plate only
B90.50.044	LW 38.44-04	250	1600	4000	80	360	150	5.5	5009CI0250
B90.50.044	LW 38.44-04	450	1600	4000	80	760	300	8.5	5009CI0450

- max. loads for $v \leq 10$ m/s and $a \leq 10$ m/s²; with $s_0 = 4$
- max. acceleration a = 50 m/s² with reduced load
- max. load offset from center 30 mm
- for X46 Cr13 rods and track rollers load capacities reduced by 30%

Track Roller Assemblies

Linear Assemblies

Profile Track Series 50

Profile Track PF 20-38.46/61

The Profile Track PF 20-38.46 with or without adapter profile, can be combined with Series 50 profiles and the carriages shown on the next page. Together they result in a linear assembly.

Ident-No.	**B51.04.082**	**B51.04.083**
Description	PF 20-38.46	PF 20-38.46/61
L1 [mm]	to 6000	to 6000
m_{Track} [kg/m]	9.5	11.5

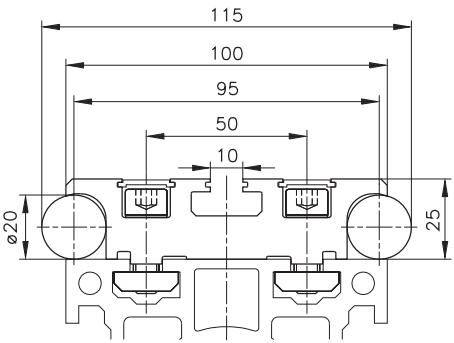

Profile Track
PF 20-38.46

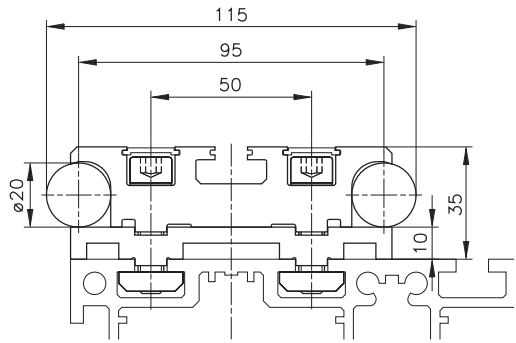

Profile Track
PF 20-38.46/61
with Adapter Profile

Hole Spacing

Range: 150 ≤ L1 < 450	450 ≤ L1 < 6000
25 ≤ A < 75	125 ≤ A < 225
$N = \left(\frac{L1-(2 \times A)}{100}+1\right) \times 2$	$N = \left(\frac{L1-(2 \times A)}{200}+3\right) \times 2$

L1 = Length of Profile Track
A = Distance to first hole
N = Number of screws

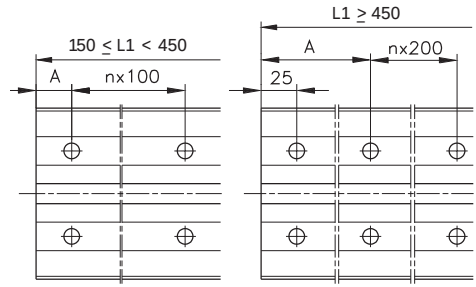

Carriages LW 38.46-04 for Profile Track PF 20-38.46/61

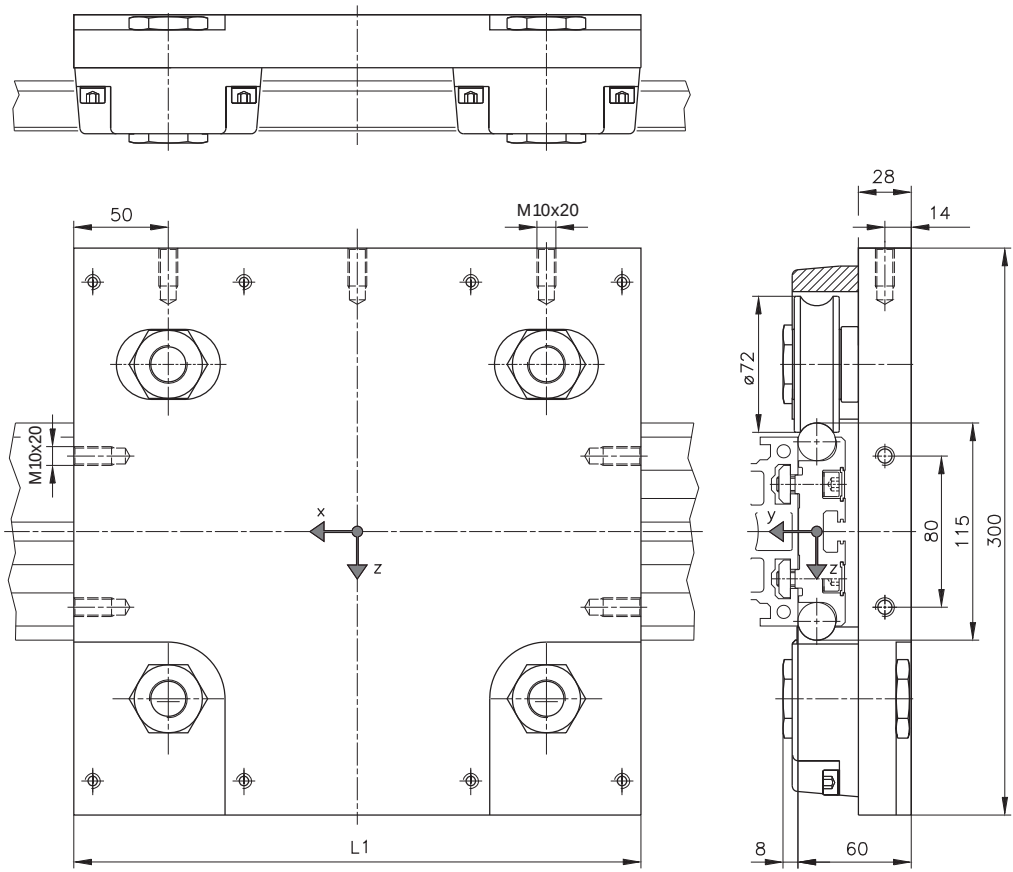

Technical Data

Ident-No.	Description	L1 [mm]	F_{y0} [N]	F_{z0} [N]	M_{x0} [Nm]	M_{y0} [Nm]	M_{z0} [Nm]	$m_{Carriage}$ [kg]	Plate only
B90.50.046	LW 38.46-04	300	3000	6000	150	600	300	11	5009CK0300
B90.50.046	LW 38.46-04	450	3000	6000	150	1000	500	14	5009CK0450

- max. loads for $v \leq 10$ m/s and $a \leq 10$ m/s²; with $s_0 = 4$
- max. acceleration a = 50 m/s² with reduced load
- max. load offset from center 40 mm
- for X46 Cr13 rods and track rollers load capacities reduced by 30%

Track Roller Assemblies

Linear Assemblies

Profile Track Series 60

Profile Track PF 16-38.36

The Profile Track PF 16-38.36, can be combined with Series 60 profiles and the carriages shown on the next page. Together they result in a linear assembly.

Ident-No.	**B51.04.109**
Description	PF 16-38.36
L1 [mm]	to 6000
m_{Track} [kg/m]	9.5

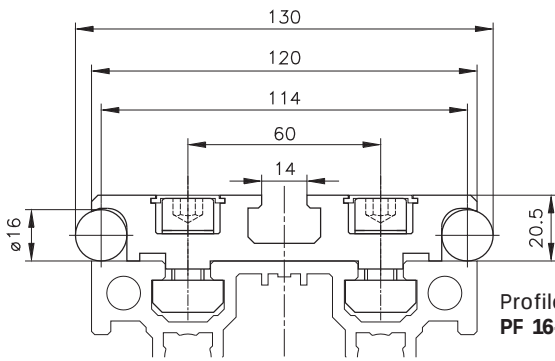

Profile Track
PF 16-38.36

Hole Spacing

Range: $150 \leq L1 < 450$	$450 \leq L1 < 6000$
$25 \leq A < 75$	$125 \leq A < 225$
$N = \left(\frac{L1-(2 \times A)}{100}+1\right) \times 2$	$N = \left(\frac{L1-(2 \times A)}{200}+3\right) \times 2$

L1 = Length of Profile Track
A = Distance to first hole
N = Number of screws

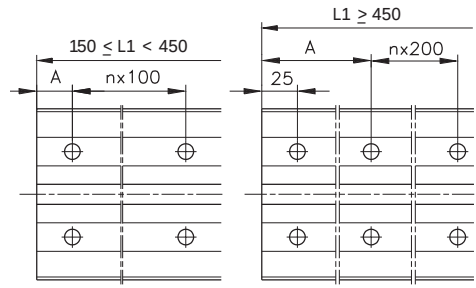

Carriages LW 38.36-04 **for Profile Track PF 16-38.36**

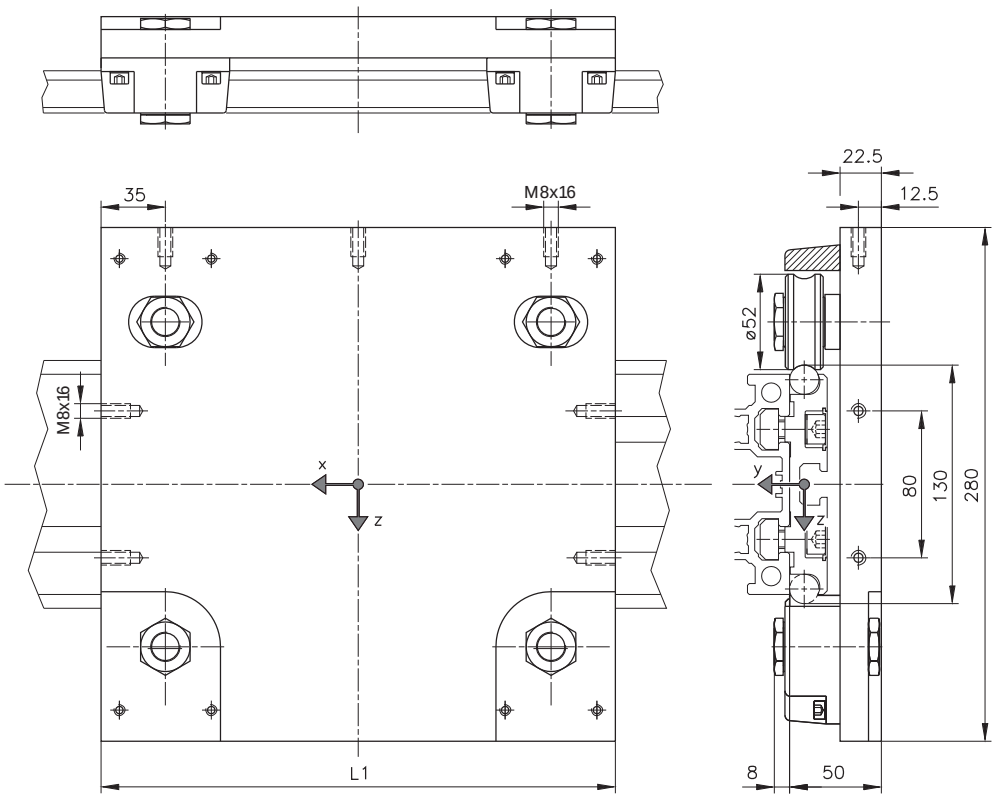

Technical Data

Ident-No.	Description	L1 [mm]	F_{y0} [N]	F_{z0} [N]	M_{x0} [Nm]	M_{y0} [Nm]	M_{z0} [Nm]	$m_{Carriage}$ [kg]	Plate only
B90.60.042	LW 38.36-04	280	1600	4000	100	420	170	6.5	5009CL0280
B90.60.042	LW 38.36-04	480	1600	4000	100	820	330	10.0	5009CL0480

- max. loads for $v \leq 10$ m/s and $a \leq 10$ m/s²; with $s_0 = 4$
- max. acceleration a = 50 m/s² with reduced load
- max. load offset from center 30 mm
- for X46 Cr13 rods and track rollers load capacities reduced by 30%

Track Roller Assemblies

Linear Assemblies

Profile Track Series 60

Profile Track PF 20-38.37

The Profile Track PF 20-38.37, can be combined with Series 60 profiles and the carriages shown on the next page. Together they result in a linear assembly.

Ident-No.	**B51.04.113**
Description	PF 20-38.37
L1 [mm]	to 6000
m_{Track} [kg/m]	10.5

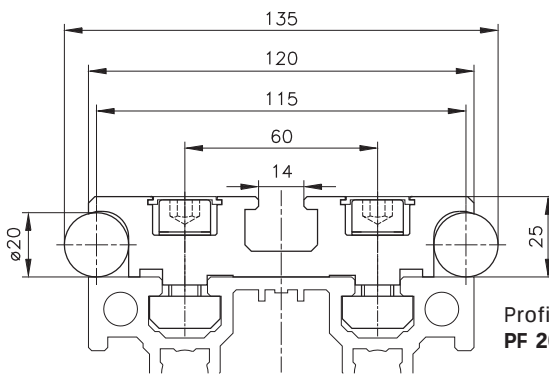

Profile Track
PF 20-38.37

Hole Spacing

Range: $150 \leq L1 < 450$	$450 \leq L1 < 6000$
$25 \leq A < 75$	$125 \leq A < 225$
$N = \left(\frac{L1-(2 \times A)}{100}+1\right) \times 2$	$N = \left(\frac{L1-(2 \times A)}{200}+3\right) \times 2$

L1 = Length of Profile Track
A = Distance to first hole
N = Number of screws

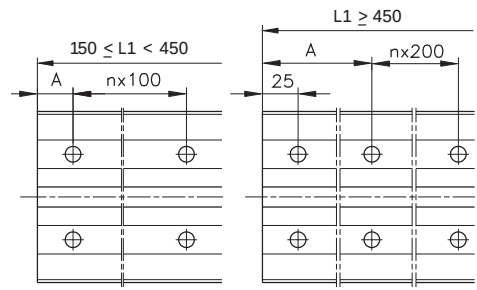

Carriages LW 38.37-04 **for Profile Track PF 20-38.37**

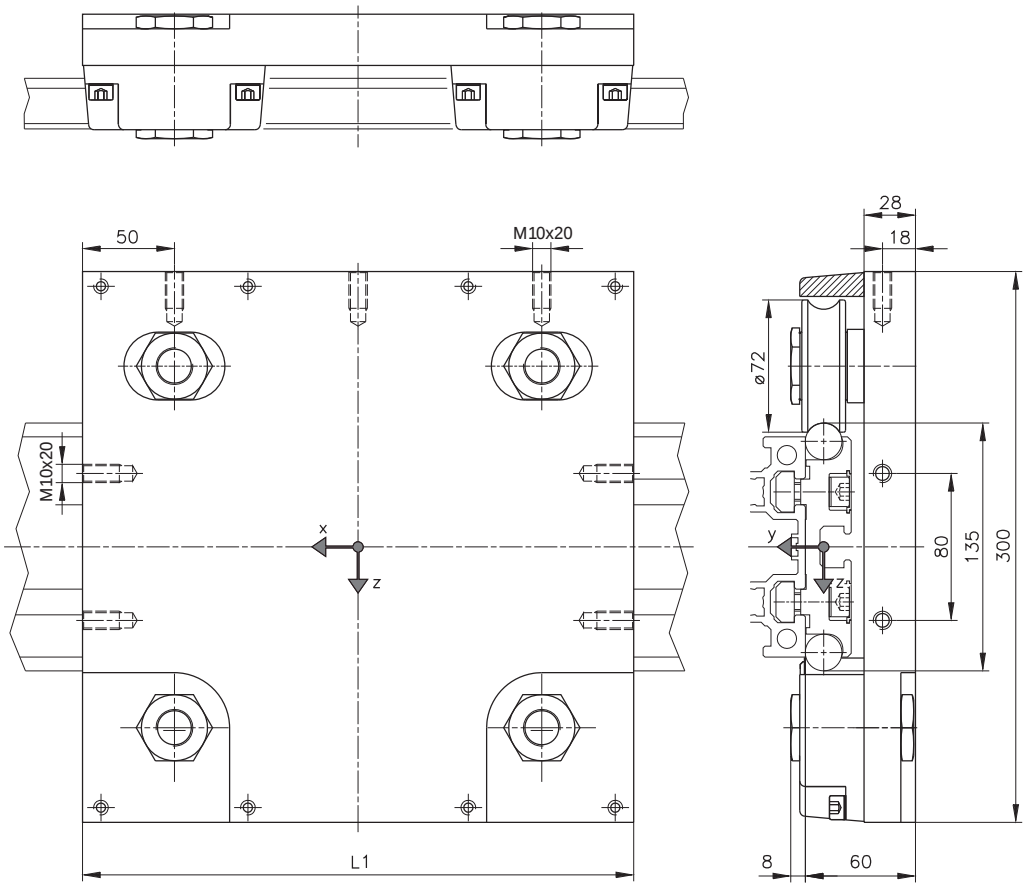

Technical Data

Ident-No.	Description	L1 [mm]	F_{y0} [N]	F_{z0} [N]	M_{x0} [Nm]	M_{y0} [Nm]	M_{z0} [Nm]	$m_{Carriage}$ [kg]	Plate only
B90.60.044	LW 38.37-04	300	3000	6000	180	600	300	11	5009CM0300
B90.60.044	LW 38.37-04	480	3000	6000	180	1100	550	15	5009CM0480

- max. loads for $v \leq 10$ m/s and $a \leq 10$ m/s²; with $s_0 = 4$
- max. acceleration a = 50 m/s² with reduced load
- max. load offset from center 40 mm
- for X46 Cr13 rods and track rollers load capacities reduced by 30%

Track Roller Assemblies

Linear Assemblies

Profile Track Series 60

Interior Profile Track PF 10-38.85

The Profile Track PF 10-38.85, can be combined with the carriage shown on the next page. Together they result in a linear assembly.

Ident-No.	**B51.04.160**
Description	PF 10-38.85
L1 [mm]	to 6000
m_{Track} [kg/m]	13.2

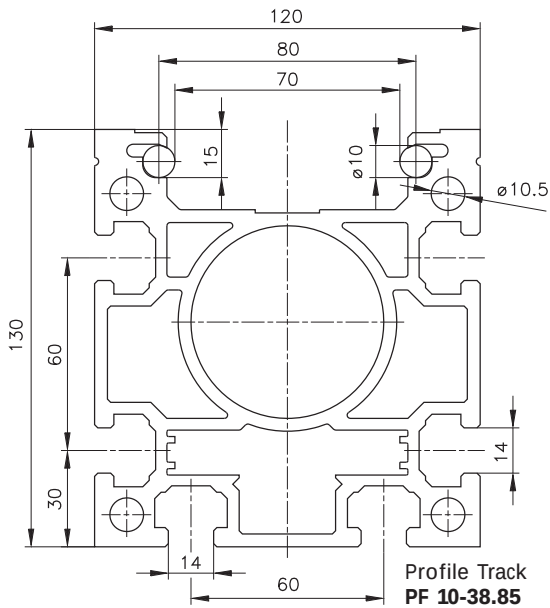

Profile Track
PF 10-38.85

Carriages LW 38.85-44 **for Profile Track PF 10-38.85**

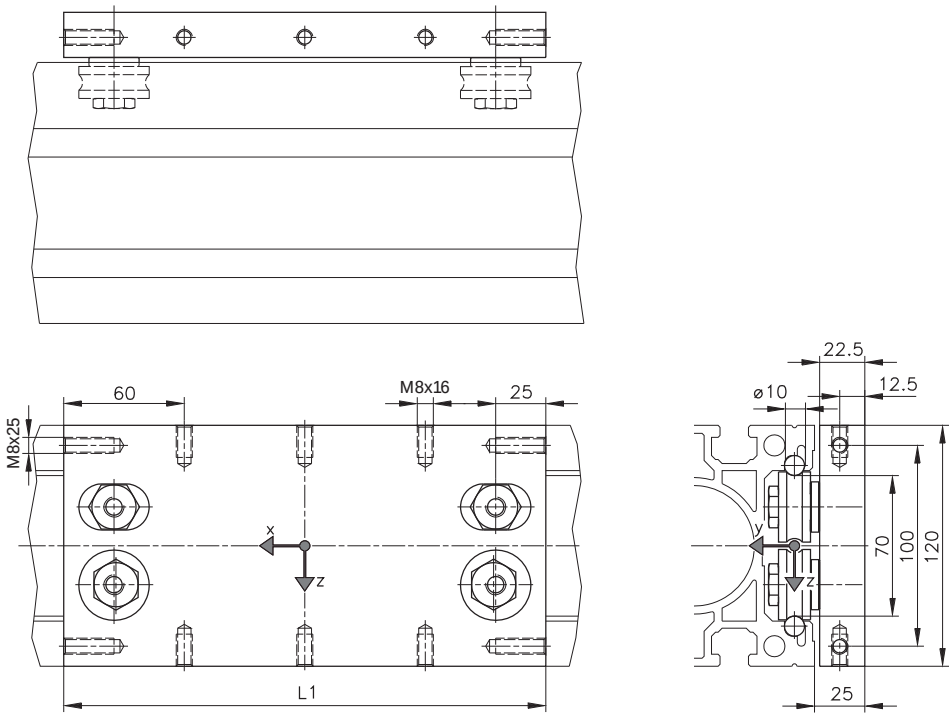

Technical Data

Ident-No.	Description	L1 [mm]	F_{y0} [N]	F_{z0} [N]	M_{x0} [Nm]	M_{y0} [Nm]	M_{z0} [Nm]	$m_{Carriage}$ [kg]	Plate only
B90.60.441	LW 38.85-44	240	1000	1500	40	190	95	2.5	5009CP0240

- max. loads for $v \leq 10$ m/s and $a \leq 10$ m/s²; with $s_0 = 4$
- max. acceleration a = 50 m/s² with reduced load
- max. load offset from center 25 mm
- for X46 Cr13 rods and track rollers load capacities reduced by 30%

Track Roller Assemblies

Linear Assemblies

Components

Profile Track **with Guide Rod one side**

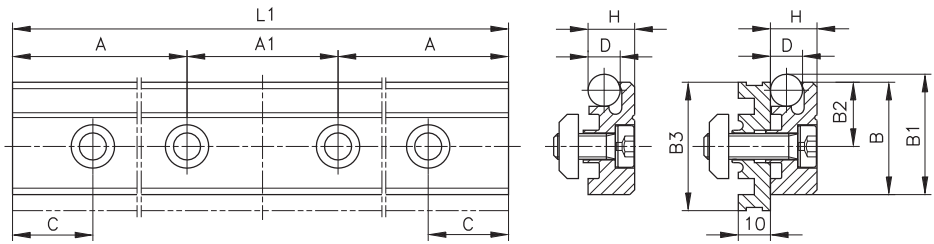

with Adapter Profile

Technical Data

Ident-No.	Description	consisting of Profile	Adapter profile	Rod	Screw	Nut
B51.04.027	PF 6-38.01	**3801BA ....***	**-**	ø 6**	D6912512	25.50.0500
B51.04.028	PF 6-38.01/50	**3801BA ....***	**3850BB ....***	ø 6**	D6912520	D05085
B51.04.040	PF 6-38.05	**3805BA ....***	**-**	ø 6**	D6912516	34.12.0001
B51.04.041	PF 6-38.05/55	**3805BA ....***	**3855BB ....***	ø 6**	D6912525	34.12.0001
B51.04.044	PF 10-38.06	**3806BA ....***	**-**	ø 10**	D6912820	34.01.0001
B51.04.045	PF 10-38.06/55	**3806BA ....***	**3855BD ....***	ø 10**	D6912830	34.01.0001
B51.04.050	PF 16-38.07	**3807BA ....***	**-**	ø 16**	D6912825	34.01.0001
B51.04.051	PF 16-38.07/55	**3807BA ....***	**3855BE ....***	ø 16**	D6912835	34.01.0001
B51.04.070	PF 10-38.11	**3811BA ....***	**-**	ø 10**	D6912820	34.01.0001
B51.04.071	PF 10-38.11/60	**3811BA ....***	**3860BB ....***	ø 10**	D6912830	34.01.0001
B51.04.076	PF 16-38.12	**3812BA ....***	**-**	ø 16**	D0912820	34.01.0001
B51.04.077	PF 16-38.12/60	**3812BA ....***	**3860BC ....***	ø 16**	D0912830	34.01.0001
B51.04.100	PF 10-38.11/65	**3811BA ....***	**3865BB ....***	ø 10**	D6912835	34.60.0101
B51.04.102	PF 16-38.12/65	**3812BA ....***	**3865BA ....***	ø 16**	D0912835	34.60.0101

....* Length in mm, **Ident-No. see Page 77

Ident-No.	D [mm]	B [mm]	B1 [mm]	B2 [mm]	B3** [mm]	H [mm]	A [mm]	A1 [mm]	C [mm]
B51.04.027/028	6	21	23	12.5	25	9	12.5 ≤ A < 50	75	-
B51.04.040/041	6	35	37	20	40	9	12.5 ≤ A < 50	75	-
B51.04.044/045	10	35	37.5	20	40	14.5	25 ≤ A < 100	150	-
B51.04.050/051	16	35	40	20	40	20.5	125 ≤ A < 225*	200	25
B51.04.070/071	10	40	42.5	25	50	14.5	25 ≤ A < 100	150	-
B51.04.076/077	16	40	45	25	50	20.5	125 ≤ A < 225*	200	25
B51.04.100	10	40	42.5	25	50	14.5	25 ≤ A < 100	150	-
B51.04.102	16	40	45	25	50	20.5	125 ≤ A < 225*	200	25

*Applies only for the range L1 ≥ 450, **Values for Adapter Profile

Profile Track **with Guide Rod both sides**

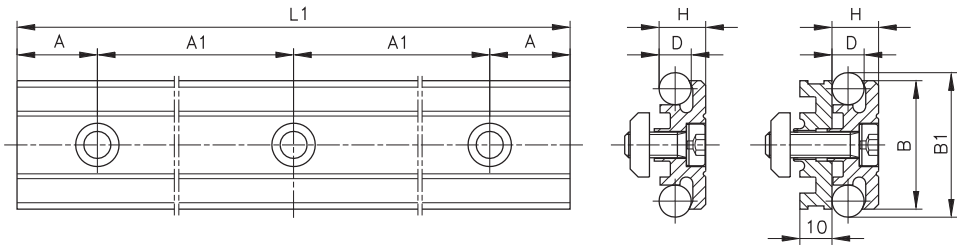

with Adapter Profile

Technical Data

Ident-No.	Description	consisting of Profile	Adapter Profile	Rod	Screw	Nut
B51.04.025	PF 6-38.20	**3820BA ....***	**-**	ø 6**	D6912512	25.50.0500
B51.04.029	PF 6-38.20/50	**3820BA ....***	**3850BA ....***	ø 6**	D6912520	D05085
B51.04.042	PF 6-38.30	**3830BA ....***	**-**	ø 6**	D6912516	34.12.0001
B51.04.043	PF 6-38.30/55	**3830BA ....***	**3855BA ....***	ø 6**	D6912525	34.12.0001
B51.04.046	PF 10-38.31	**3831BA ....***	**-**	ø 10**	D6912820	34.01.0001
B51.04.047	PF 10-38.31/55	**3831BA ....***	**3855BC ....***	ø 10**	D6912830	34.01.0001
B51.04.020	PF 10-38.41	**3841BA ....***	**-**	ø 10**	D6912820	34.01.0001
B51.04.015	PF 10-38.41/60	**3841BA ....***	**3860BA ....***	ø 10**	D6912830	34.01.0001
B51.04.101	PF 10-38.41/65	**3841BA ....***	**3865BC ....***	ø 10**	D6912835	34.60.0101

....* Length in mm, **Ident-No. see Page 77

Ident-No.	D [mm]	B [mm]	B1 [mm]	H [mm]	A [mm]	A1 [mm]
B51.04.025/029	6	25	29	9	12.5 ≤ A < 37.5	50
B51.04.042/043	6	40	44	9	12.5 ≤ A < 37.5	50
B51.04.046/047	10	40	45	14.5	25 ≤ A < 75	100
B51.04.020/015	10	50	55	14.5	25 ≤ A < 75	100
B51.04.101	10	50	55	14.5	25 ≤ A < 75	100

Track Roller Assemblies

Linear Assemblies

Components

Profile Track **with Guide Rod both sides**

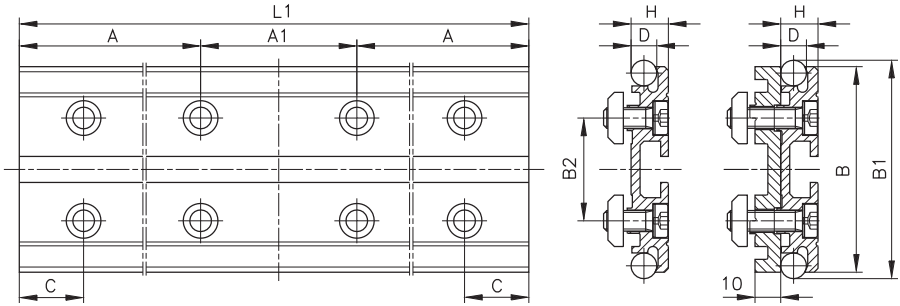

with Adapter Profile

Technical Data

Ident-No.	Description	consisting of Profile	Adapter Profile	Rod	Screw	Nut
B51.04.030	PF 6-38.21	**3821BA ....***	**-**	ø 6**	D6912512	25.50.0500
B51.04.031	PF 6-38.21/51	**3821BA ....***	**3851BA ....***	ø 6**	D6912520	D05085
B51.04.048	PF 10-38.32	**3832BA ....***	**-**	ø 10**	D6912820	34.01.0001
B51.04.049	PF 10-38.32/56	**3832BA ....***	**3856BB ....***	ø 10**	D6912830	34.01.0001
B51.04.052	PF 16-38.33	**3833BA ....***	**-**	ø 16**	D6912825	34.01.0001
B51.04.053	PF 16-38.33/56	**3833BA ....***	**3856BA ....***	ø 16**	D6912835	34.01.0001

....* Length in mm, **Ident-No. see Page 77

Ident-No.	D [mm]	B [mm]	B1 [mm]	B2 [mm]	H [mm]	A [mm]	A1 [mm]	C [mm]
B51.04.030/031	6	50	54	25	9	12.5 ≤ A < 50	75	-
B51.04.048/049	10	80	85	40	14.5	25 ≤ A < 100	150	-
B51.04.052/053	16	80	90	40	20.5	125 ≤ A < 225*	200	25

*Applies only for the range L1 ≥ 450

Profile Track **with Guide Rod both sides**

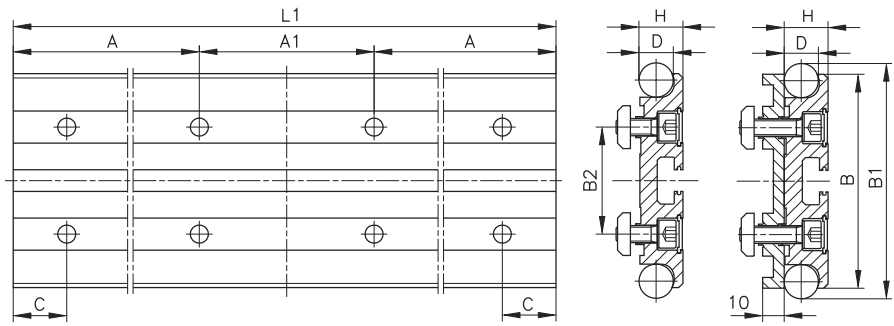

with Adapter Profile

Technical Data

Ident-No.	Description	consisting of Profile	Adapter Profile	Rod	Screw	Nut	Closure Strip
B51.04.004	PF 16-38.44	**3844BA ....***	**-**	ø 16**	D0912820	34.01.0001	mk 3018
B51.04.016	PF 16-38.44/61	**3844BA ....***	**3861BA ....***	ø 16**	D0912830	34.01.0001	mk 3018
B51.04.082	PF 20-38.46	**3846BA ....***	**-**	ø 20**	D0912825	34.01.0001	mk 3018
B51.04.083	PF 20-38.46/61	**3846BA ....***	**3861BA ....***	ø 20**	D0912835	34.01.0001	mk 3018
B51.04.109	PF 16-38.36	**3836BA ....***	**-**	ø 16**	D69121025	34.60.0201	mk 3028
B51.04.113	PF 20-38.37	**3837BA ....***	**-**	ø 20**	D69121030	34.60.0201	mk 3028

....* Length in mm, **Ident-No. see Page 77

Ident-No.	D [mm]	B [mm]	B1 [mm]	B2 [mm]	H [mm]	A [mm]	A1 [mm]	C [mm]
B51.04.004/016	16	100	110	50	20.5	125 ≤ A < 225*	200	25
B51.04.082/083	20	100	115	50	25	125 ≤ A < 225*	200	25
B51.04.109	16	120	130	60	20.5	125 ≤ A < 225*	200	25
B51.04.113	20	120	135	60	25	125 ≤ A < 225*	200	25

*Applies only for the range L1 ≥ 450

Track Roller Assemblies

Linear Assemblies

Components

Internal Profile Track **with Guide Rod both sides**

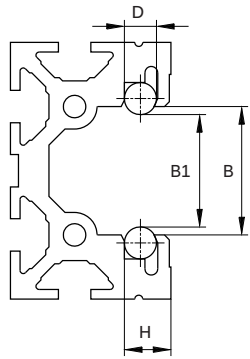

Technical Data

Ident-No.	Description	consisting of Profile	Adapter Profile	Rod	Screw	Nut	Closure Strip
B51.04.140	PF 6-38.75	**38.75. ....***	-	ø 6**	-	-	-
B51.04.142	PF 10-38.77	**38.77. ....***	-	ø 10**	-	-	-
B51.04.160	PF 10-38.85	**38.85. ....***	-	ø 10**	-	-	-

....* Length in mm, **Ident-No. see Page 77

Ident-No.	D [mm]	B [mm]	B1 [mm]	B2 [mm]	H [mm]	A [mm]	A1 [mm]	C [mm]
B51.04.140	6	44	40	-	9	-	-	-
B51.04.142	10	40	35	-	14.5	-	-	-
B51.04.160	10	75	70	-	15	-	-	-

Carriage Plates

EN AW-2017A (AlCuMg1)

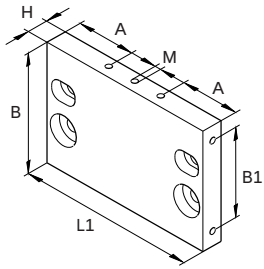

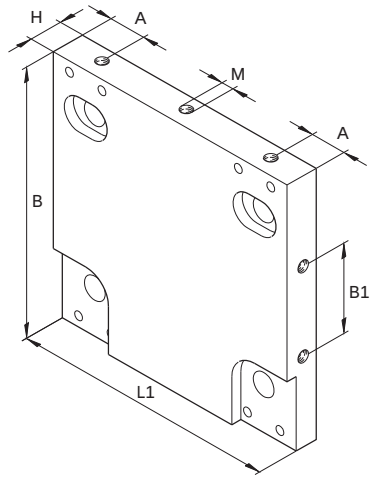

Technical Data

Description	L1 [mm]	B [mm]	H [mm]	A [mm]	B1 [mm]	M [mm]	for Carriage Ident-No.	Description	for Profile Tracks* Ident-No.	Description
5009CA0075	75	75	15	12.5	25	5x12	B90.25.041	LW 38.20-04	B51.04.025	PF 6-38.20
5009CA0100	100	75	15	12.5	25	5x12	B90.25.041	LW 38.20-04	B51.04.025	PF 6-38.20
5009CB0100	100	100	15	12.5	25	5x12	B90.25.042	LW 38.21-04	B51.04.030	PF 6-38.21
5009CB0150	150	100	15	12.5	25	5x12	B90.25.042	LW 38.21-04	B51.04.030	PF 6-38.21
5009CC0100	100	100	15	12.5	25	5x12	B90.40.041	LW 38.30-04	B51.04.042	PF 6-38.30
5009CC0160	160	100	15	12.5	25	5x12	B90.40.041	LW 38.30-04	B51.04.042	PF 6-38.30
5009CD0140	140	140	22.5	25	40	8x16	B90.40.042	LW 38.31-04	B51.04.046	PF 10-38.31
5009CD0240	240	140	22.5	25	40	8x16	B90.40.042	LW 38.31-04	B51.04.046	PF 10-38.31
5009CE0180	180	180	22.5	25	60	8x16	B90.40.043	LW 38.32-04	B51.04.048	PF 10-38.32
5009CE0280	280	180	22.5	25	60	8x16	B90.40.043	LW 38.32-04	B51.04.048	PF 10-38.32
5009CF0240	240	240	22.5	35	60	8x16	B90.40.044	LW 38.33-04	B51.04.052	PF 16-38.33
5009CF0400	400	240	22.5	35	60	8x16	B90.40.044	LW 38.33-04	B51.04.052	PF 16-38.33
5009CG0150	150	150	22.5	25	60	8x16	B90.50.042	LW 38.41-04	B51.04.020	PF 10-38.41
5009CG0250	250	150	22.5	25	60	8x16	B90.50.042	LW 38.41-04	B51.04.020	PF 10-38.41
5009CI0250	250	250	22.5	35	60	8x16	B90.50.044	LW 38.44-04	B51.04.004	PF 16-38.44
5009CI0450	450	350	22.5	35	60	8x16	B90.50.044	LW 38.44-04	B51.04.004	PF 16-38.44
5009CK0300	300	300	28	50	80	10x20	B90.50.046	LW 38.46-04	B51.04.082	PF 20-38.46
5009CK0450	450	300	28	50	80	10x20	B90.50.046	LW 38.46-04	B51.04.082	PF 20-38.46
5009CL0280	280	280	22.5	35	80	8x16	B90.60.042	LW 38.36-04	B51.04.109	PF 16-38.36
5009CL0480	480	280	22.5	35	80	8x16	B90.60.042	LW 38.36-04	B51.04.109	PF 16-38.36
5009CM0300	300	300	28	50	80	10x20	B90.60.044	LW 38.37-04	B51.04.113	PF 20-38.37
5009CM0480	480	380	28	50	80	10x20	B90.60.044	LW 38.37-04	B51.04.113	PF 20-38.37
5009CN0120	120	80	14	40	60	5x12	B90.40.441	LW 38.75-44	B51.04.140	PF 6-38.75
5009CO0160	160	80	22.5	40	60	8x16	B90.44.442	LW 38.77-44	B51.04.142	PF 10-38.77
5009CP0240	190	120	22.5	60	100	8x16	B90.60.441	LW 38.85-44	B51.04.160	PF 10-38.85

*Ident-No. and description only for track without adapter profile
The carriage plates may be used with tracks which include adapter profiles.

Track Roller Assemblies

Linear Assemblies

Components

Track Rollers

for Guide Rods ø 6, ø 10, ø 16, ø 20

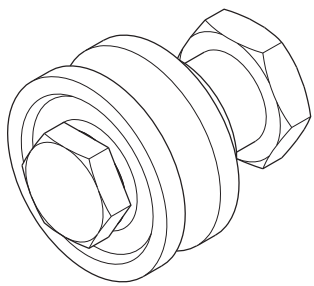

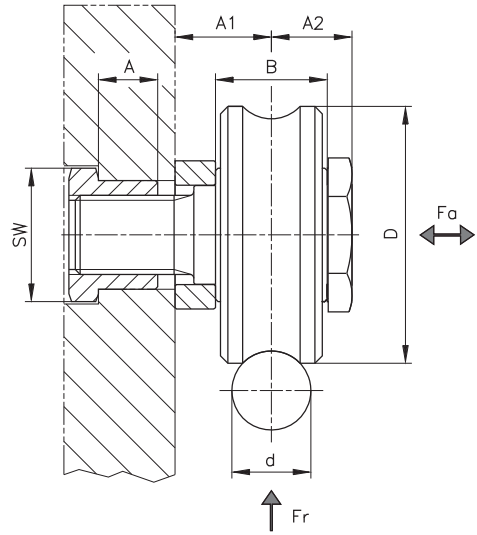

Technical Data

Ident-No.	D [mm]	B [mm]	A [mm]	A1 [mm]	A2 [mm]	SW [mm]	d for Rod	consisting of Track Roller	Bolt	Spacer	Bushing
B60.02.017 centric	17	8	5	7	7	13	ø 6*	K101100003	25.51.3201	25.51.3301	25.51.3101
B60.02.018 excentric	17	8	5	7	7	13	ø 6*	K101100003	25.51.3201	25.51.3301	25.51.3102
B60.02.015 centric	35	15.9	12	12.5	13	22	ø 10*	K101100001	05.06.0003	14.04.0003	06.01.0013
B60.02.016 excentric	35	15.9	12	12.5	13	22	ø 10*	K101100001	05.06.0003	14.04.0003	06.01.0014
B60.02.013 centric	52	22.6	12	19.5	16.3	27	ø 16*	K101100002	05.06.0007	14.04.0004	06.01.0018
B60.02.014 excentric	52	22.6	12	19.5	16.3	27	ø 16*	K101100002	05.06.0007	14.04.0004	06.01.0017
B60.02.011 centric	72	25.8	18	22	18	36	ø 20*	K101100006	05.06.0009	14.04.0020	06.01.0021
B60.02.012 excentric	72	25.8	18	22	18	36	ø 20*	K101100006	05.06.0009	14.04.0020	06.01.0022

*Ident-No. see page 77
Track Rollers for all diameters also available in stainless steel.

Load Capacities per Roller

Value	Roller for Rod ø 6 mm	Roller for Rod ø 10 mm	Roller for Rod ø 16 mm	Roller for Rod ø 20 mm
so*	4	4	4	4
Fr	175N	1000N	2000N	3250N
Fa	60N	300N	500N	825N
static load cap. C_{ow}	890N	5100N	9500N	16600N
dynamic load cap. C_w	1270N	8500N	16800N	29500N

* static load capacity against plastic deformation of the raceways and rolling elements.
These values to be reduced by 30% for stainless steel rollers.

Guide Rods

The stock lengths of Cf 53 and X46 Cr13 (corrosion resistant) rods is 4000 mm, for Cf 53 galvanized rods 3000 mm.

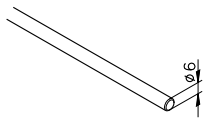

Guide Rod 6
0.22 kg/m

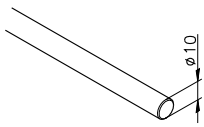

Guide Rod 10
0.62 kg/m

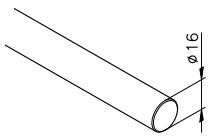

Guide Rod 16
1.58 kg/m

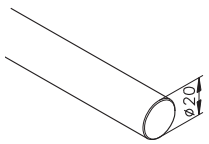

Guide Rod 20
2.47 kg/m

Ident-Numbers

	Cf 53 1.1213	Cf 53 1.1213 (galva-nized)	X46 Cr13 1.4034
ø 6 mm	**7003AK....***	**7003DC....***	**7003EC....***
ø 10 mm	**7003AA....***	**7003DH....***	**7003EH....***
ø 16 mm	**7003AM....***	**7003DP....***	**7003EP....***
ø 20 mm	**7003CM....***	**7003DT....***	**7003ET....***

....* Rod length in mm

Wipers

Polyamide

The wiper housings act as a safeguard (housing covers pinch points at the track rollers) as well as serve to remove dirt and other contaminants from the guide rods.

The rubber wipers for 10 and 16 mm rod diameters conform to the shape of the rod and can wipe off finer particulates.

On request, wipers for the 10 and 16 mm diameter rods are available with felt strips and fittings for oil lubrication.

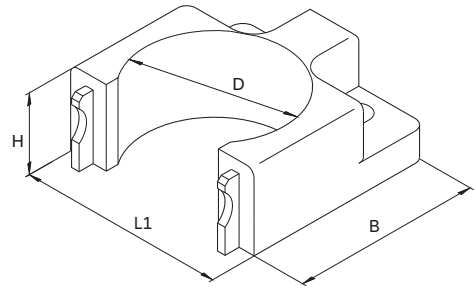

Technical Data

Ident-No.	d for Rod	L1 [mm]	B [mm]	H [mm]	D [mm]
B03.00.014	ø 6**	25	22.5	11	19
B03.00.003	ø 10	50	46	20	37
B03.00.004	ø 16	70	64	30	56
B03.00.013	ø 20**	100	80	35	76

**wiper without rubber seal

Track Roller Assemblies

Linear Assemblies

Components

Clamping Profiles

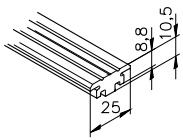

25 | 40 | 50 | 60

mk 2038.20
0.44 kg/m
AlMgSi 0.7 F28

Stock length	**38.20.6100**
Cut	**38.20. ....***

Used with
Guide Rod ø 6 mm

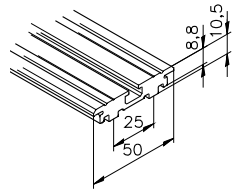

25 | 40 | 50 | 60

mk 2038.21
0.88 kg/m
AlMgSi 0.7 F28

Stock length	**38.21.6100**
Cut	**38.21. ....***

Used with
Guide Rod ø 6 mm

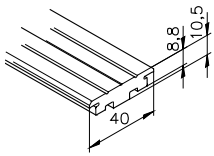

25 | 40 | 50 | 60

mk 2038.30
0.79 kg/m
AlMgSi 0.7 F28

Stock length	**38.30.6100**
Cut	**38.30. ....***

Used with
Guide Rod ø 6 mm

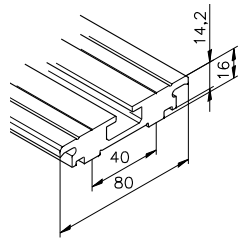

25 | 40 | 50 | 60

mk 2038.32
0.44 kg/m
AlMgSi 0.7 F28

Stock length	**38.32.6100**
Cut	**38.32. ....***

Used with
Guide Rod ø 10 mm

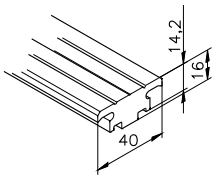

25 | 40 | 50 | 60

mk 2038.31
1.07 kg/m
AlMgSi 0.7 F28

Stock length	**38.31.6100**
Cut	**38.31. ....***

Used with
Guide Rod ø 10 mm

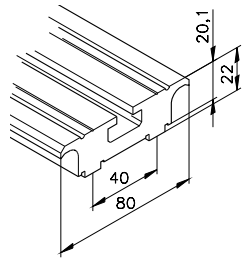

25 | 40 | 50 | 60

mk 2038.33
2.96 kg/m
AlMgSi 0.7 F28

Stock length	**38.33.6100**
Cut	**38.33. ....***

Used with
Guide Rod ø 16 mm

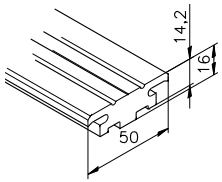

25 | 40 | 50 | 60

mk 2038.41
1.36 kg/m
AlMgSi 0.7 F28

Stock length	**38.41.6100**
Cut	**38.41. ....***

Used with
Guide Rod ø 10 mm

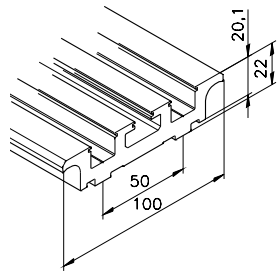

25 | 40 | 50 | 60

mk 2038.44
3.09 kg/m
AlMgSi 0.7 F28

Stock length	**38.44.6100**
Cut	**38.44. ....***

Used with
Guide Rod ø 16 mm

Clamping Profiles

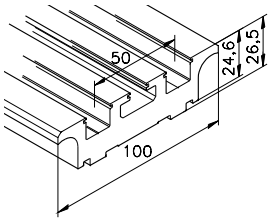

25 | 40 | **50** | 60

mk 2038.46

3.97 kg/m
AlMgSi 0.7 F28

Stock length	**38.46.6100**
Cut	**38.46. ....***

Used with
Guide Rod ø 20 mm

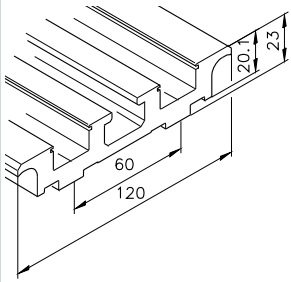

25 | 40 | 50 | **60**

mk 2038.36

3.62 kg/m
AlMgSi 0.7 F28

Stock length	**38.36.6100**
Cut	**38.36. ....***

Used with
Guide Rod ø 16 mm

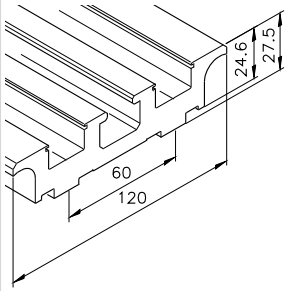

25 | 40 | 50 | **60**

mk 2038.37

4.60 kg/m
AlMgSi 0.7 F28

Stock length	**38.37.6100**
Cut	**38.37. ....***

Used with
Guide Rod ø 20 mm

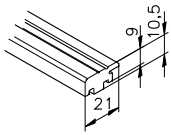

25 | 40 | 50 | 60

mk 2038.01

0.42 kg/m
AlMgSi 0.7 F28

Stock length	**38.01.6100**
Cut	**38.01. ....***

Used with
Guide Rod ø 6 mm

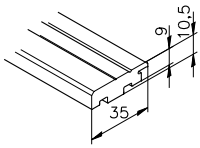

25 | **40** | 50 | 60

mk 2038.05

0.75 kg/m
AlMgSi 0.7 F28

Stock length	**38.05.6100**
Cut	**38.05. ....***

Used with
Guide Rod ø 6 mm

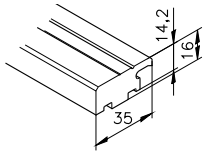

25 | **40** | 50 | 60

mk 2038.06

1.12 kg/m
AlMgSi 0.7 F28

Stock length	**38.06.6100**
Cut	**38.06. ....***

Used with
Guide Rod ø 10 mm

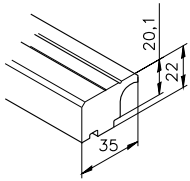

25 | **40** | 50 | 60

mk 2038.07

1.50 kg/m
AlMgSi 0.7 F28

Stock length	**38.07.6100**
Cut	**38.07. ....***

Used with
Guide Rod ø 16 mm

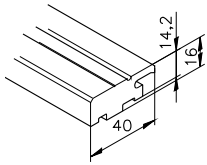

25 | 40 | **50** | 60

mk 2038.11

1.27 kg/m
AlMgSi 0.7 F28

Stock length	**38.11.6100**
Cut	**38.11. ....***

Used with
Guide Rod ø 10 mm

Track Roller Assemblies

Linear Assemblies

Components

Clamping Profiles

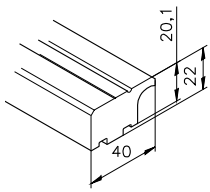

25 | 40 | **50** | 60

mk 2038.12
1.77 kg/m
AlMgSi 0.7 F28

Stock length	**38.12.6100**
Cut	**38.12. ....***

Used with
Guide Rod ø 16 mm

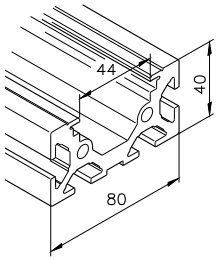

25 | **40** | 50 | 60

mk 2038.75
3.41 kg/m
AlMgSi 0.7 F28

Stock length	**38.75.6100**
Cut	**38.75. ....***

Used with Guide Rod
ø 6 mm, Guided inside

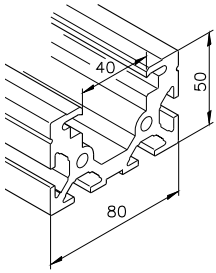

25 | **40** | 50 | 60

mk 2038.77
4.34 kg/m
AlMgSi 0.7 F28

Stock length	**38.77.6100**
Cut	**38.77. ....***

Used with
Guide Rod ø 10 mm,
Guided inside

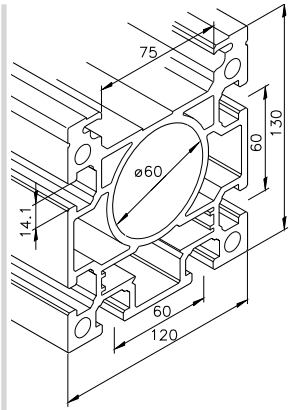

25 | 40 | 50 | **60**

mk 2038.85
11.85 kg/m
AlMgSi 0.7 F28

Stock length	**38.85.6100**
Cut	**38.85. ....***

Used with Guide Rod
ø 10 mm, Guided inside

Adapter Profiles

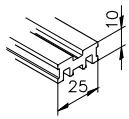

25 | 40 | 50 | 60

mk 2038.50
0.46 kg/m
AlMgSi 0.7 F28

Stock length	**38.50.6100**
Cut	**38.50. ....***

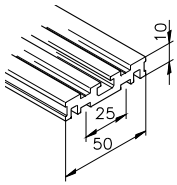

25 | 40 | 50 | 60

mk 2038.51
0.89 kg/m
AlMgSi 0.7 F28

Stock length	**38.51.6100**
Cut	**38.51. ....***

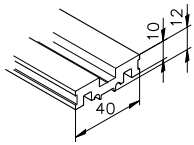

25 | 40 | 50 | 60

mk 2038.55
0.77 kg/m
AlMgSi 0.7 F28

Stock length	**38.55.6100**
Cut	**38.55. ....***

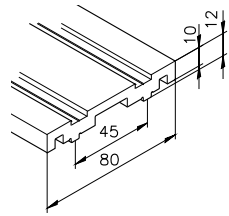

25 | 40 | 50 | 60

mk 2038.56
1.67 kg/m
AlMgSi 0.7 F28

Stock length	**38.56.6100**
Cut	**38.56. ....***

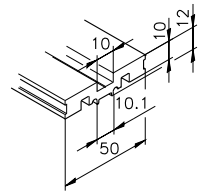

25 | 40 | 50 | 60

mk 2038.60
1.04 kg/m
AlMgSi 0.7 F28

Stock length	**38.60.6100**
Cut	**38.60. ....***

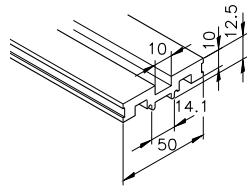

25 | 40 | 50 | 60

mk 2038.65
1.00 kg/m
AlMgSi 0.7 F28

Stock length	**38.65.6100**
Cut	**38.65. ....***

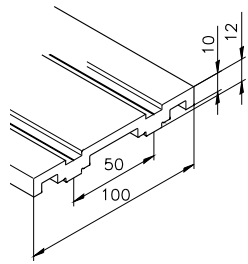

25 | 40 | 50 | 60

mk 2038.61
1.90 kg/m
AlMgSi 0.7 F28

Stock length	**38.61.6100**
Cut	**38.61. ....***

Track Roller Assemblies

Linear Module

General Information

LZR Linear Modules with Timing Belts

The linear modules take the track roller carriages to another level, creating a fully modular assembly. Basic elements include the supporting and track profiles, the carriage wagon, as well as the required timing belt drive components including tails and profile connections.

As a standard, the LZRs are designed to be motor driven. With the appropriate hollow shaft, the tail housings enable motors to be installed directly on any side of the LZR. Available options include output shafts for the direct mounting of hollow shaft motors, adapters for gearboxes and couplings, as well as components for indirect drives.

For electromechanical drives using stepper or servo motors we recommend using one-piece drive shafts, available as options.

Combinations of linear modules to manufacture 2- and 3-axis systems, as well as gantries and other customer-specific applications are available.

Achievable Precision of Linear Modules with Timing Belts

For LZRs using a type 8M-30 timing belt, the following no-load values are achievable:

Repeatability:		0.1 mm
Positional Accuracy:	±	0.2 mm
Hysteresis:		0.2 mm

These values will vary depending on stroke length and application.

How to Order

LZR 2025-38.20-16

- System Designation
- Support Profile
- Clamping Profile
- Timing Belt Width

Order Example

Linear Module	**LZR 2025-38.20-16**
Ident-No.	**B38.25.001**
Stroke	= .....mm
Overall Length	L = ...mm
Carriage Length	L_1 = ...mm
Hollow Drive Shaft	ø = ...mm
Linear Speed	v = ...m/s
Acceleration	a = ...m/s^2

General Information

Remarks to the Load Data

For information regarding the track roller guides, refer to the information beginning on page 42.

Remarks to the Load Data for Timing Belts
Standard timing belts used are PU (Polyurethane) with steel cord tension members. Other types, including conductive belts, are available.

The maximum speed of v = 10 m/s of linear assemblies can be achieved using timing belts with no reduction of the load capacities.

As of a > 10 m/s² the values for the standard load factors must be reduced (due to the physical limitations of the timing belts).

The allowable tension loads are based on a 0.4 % stretch of the timing belt.

The breaking strength of the belts is significantly higher. The normally usable belt pull strength (Fu) and required pretension (Fv) is approximately:

$F_{allowable} = F_v + F_u$ with $F_v = F_u$

Timing Belt	AT 5-16	5M-15	8M-30
$F_{breaking}$	3900 N	3600 N	14900 N
$F_{allowable}$	1200 N	1150 N	4000 N
$F_v = F_u$	600 N	575 N	2000 N

The usable starting torque results from the maximum usable belt pull strength, of the engaged teeth and the pitch diameter of the drive pulley.

Values for the mk LZR Modules:

Timing Belt	AT 5-16	5M-15	8M-30
D_{Pitch}	41.4 mm	50.9 mm	71.3 mm
Z	26	32	28
M_{Drive}	12 Nm	15 Nm	70 Nm

Motor Selection/Drive Design

For the motor selection several factors must be considered, including the timing belt (especially the allowable belt pull strength and required stiffness), as well as the motor - especially the starting torque, the revolutions per minute and the resulting performance.

The most important consideration is the required driving force. As a simple starting point for the calculations, the transition point from acceleration to constant speed can be used.

Constant acceleration (a = constant):

$$v = a \cdot t = \sqrt{2 \cdot a \cdot s}$$

Constant speed (v = constant):

$$v = \frac{s}{t}$$

Max. drive force:

$F_{Drive} = F_a + F_{Roll} + F_{Empty} + F_{Additional}$

$F_a = m \cdot (a+g)$

with m = moving masses in kg
a = constant acceleration in m/s²
g = 10 m/s², for vertical travel
g = 0 m/s², for horizontal travel

$F_{Roll} = F_N \cdot \mu_{Roll}$

with $F_N = F_G$ for horizontal travel
μ_{Roll} = 0.05 for lightly preloaded track roller

F_{Empty} = 50 to 100 N depending on Linear Module and pretension of timing belt

$F_{Additional}$ = Additional customer load

$F_{Drive} = m \cdot (a+g) + F_N \cdot 0.05 + 100\ N + F_{Additional}$

Timing Belt Selection:

Indicated $F_{Drive} < F_u$

For Motor Selection:

$$M_{req} = \frac{F_{Drive} \cdot D_{pitch}\ [m]}{2 \cdot \eta}$$

$$n_{req} = \frac{v \cdot 60}{D_{pitch}\ [m] \cdot \pi}$$

$$P_{req} = \frac{F_{Drive} \cdot v}{\eta}$$

with D_{pitch} in m of Pulley
η = 50 to 75% depending on selected drive (gear reducer, motor, etc.)
v in m/s

Track Roller Assemblies

Linear Module

Type LZR 2025-38.20-16 **with Carriage Wagon**

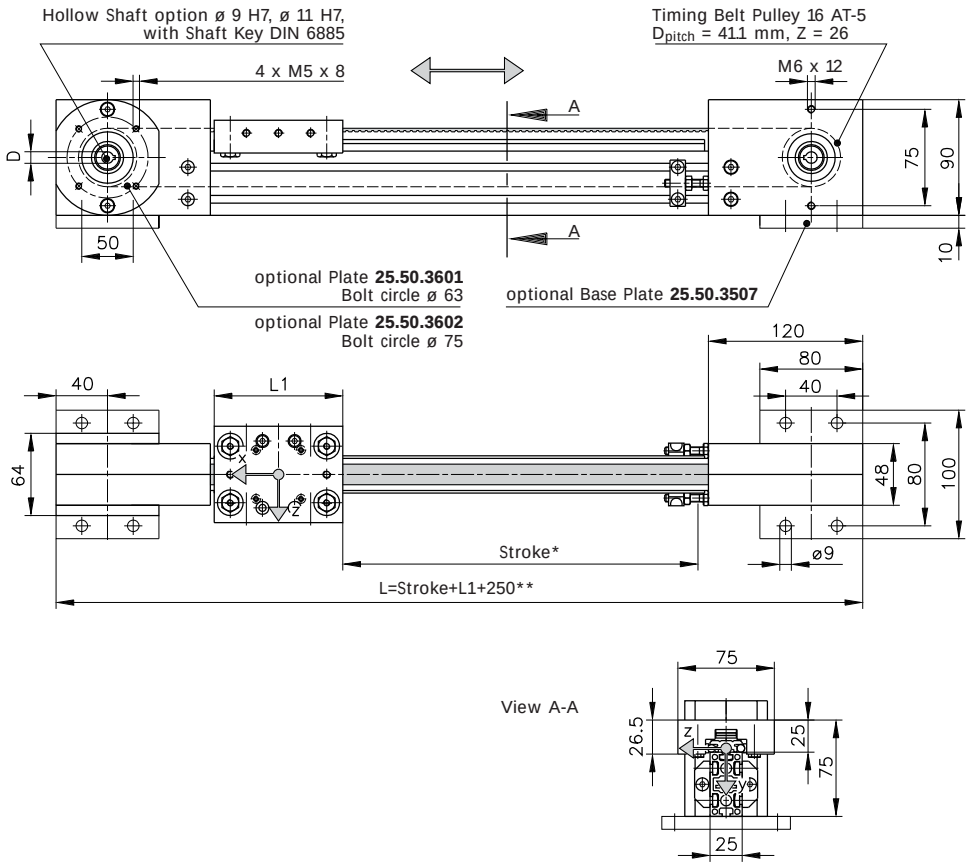

Load Data LZR 2025-38.20-16 with Carriage Wagon

Ident-No.	L1 [mm]	F_x*** [N]	F_{y0} [N]	F_{z0} [N]	M_{x0} [Nm]	M_{y0} [Nm]	M_{z0} [Nm]
B38.25.001	100	1200	200	350	2.5	13	8
B38.25.001	150	1200	200	350	2.5	21	13
B38.25.001	200	1200	200	350	2.5	30	18

* Maximum stroke between fixed stops.
** Variable length, depends on pre-tension of timing belt (achieved by moving tail stock).
*** $F_x = F_{allowable}$; F_u = 600 N = F_v

Type LZR 2000-38.41-15 **with Carriage Wagon**

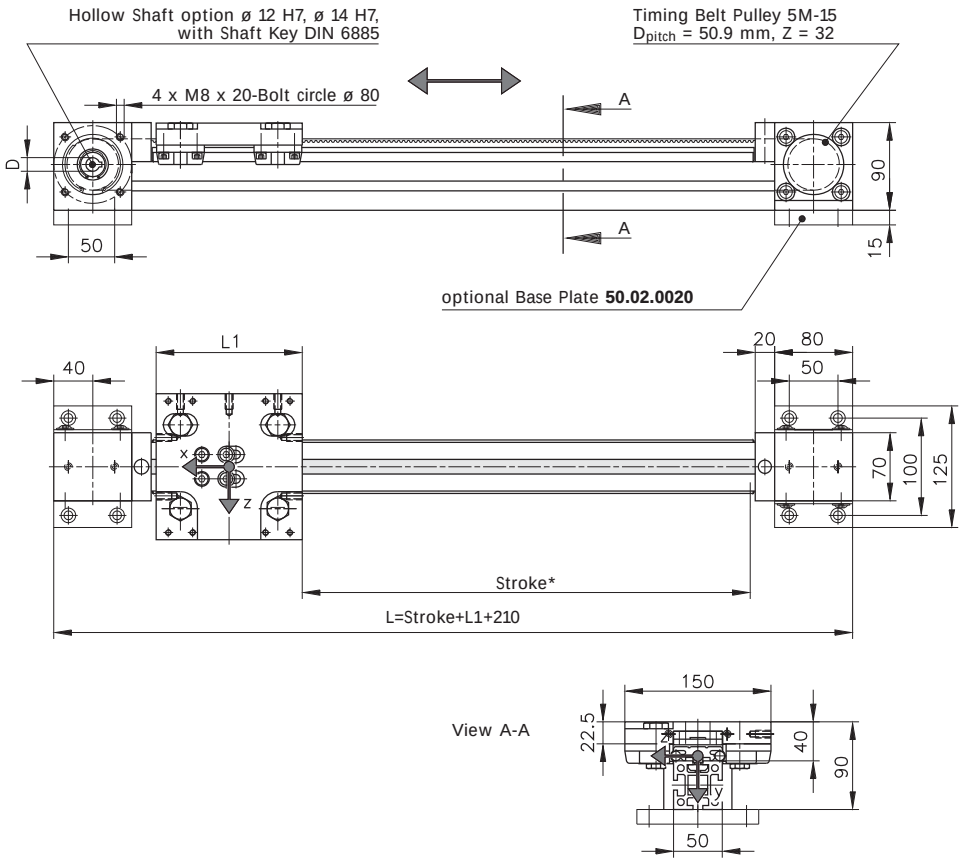

Load Data LZR 2000-38.41-15 with Carriage Wagon

Ident-No.	L1 [mm]	F_x** [N]	F_{y0} [N]	F_{z0} [N]	M_{x0} [Nm]	M_{y0} [Nm]	M_{z0} [Nm]
B38.02.003	150	1150	1000	2000	25	100	50
B38.02.003	250	1150	1000	2000	25	200	100

* Maximum stroke between fixed stops.
** $F_x = F_{allowable}$; F_u = 575 N = F_v

Type LZR 2000-38.41-15 **with side mounted Carriage Wagon**

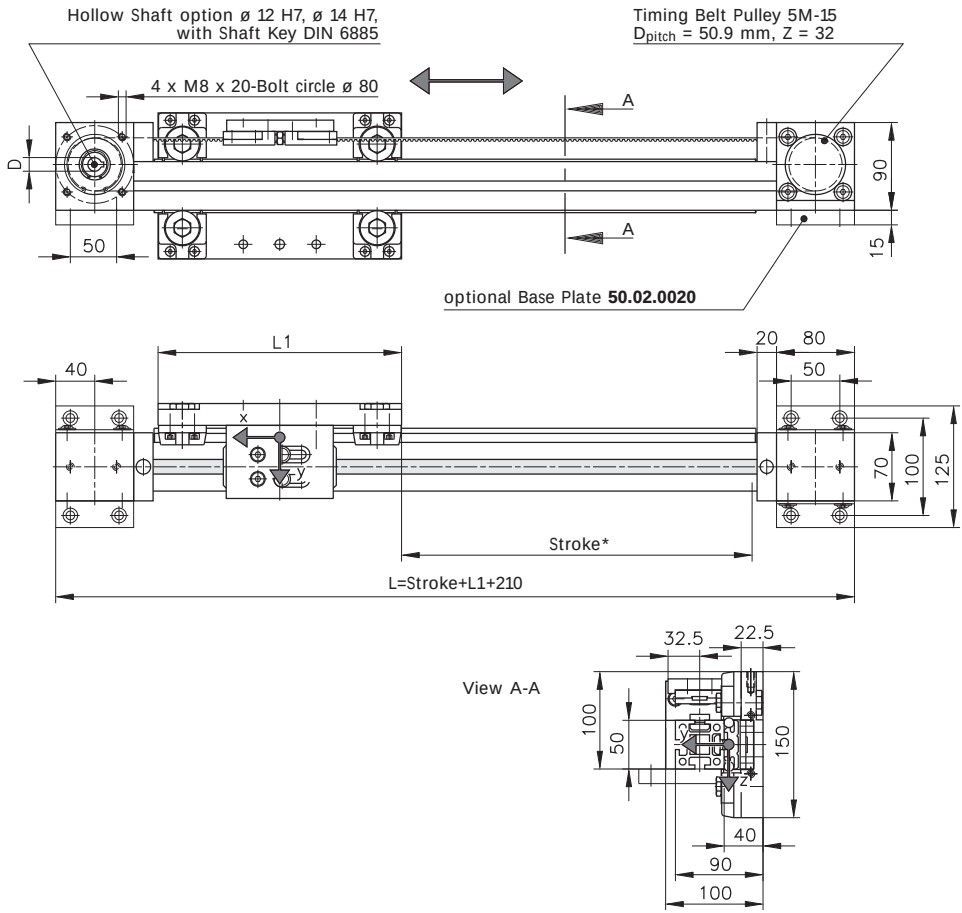

Load Data LZR 2000-38.41-15 with side mounted Carriage Wagon

Ident-No.	L1 [mm]	F_x** [N]	F_{y0} [N]	F_{z0} [N]	M_{x0} [Nm]	M_{y0} [Nm]	M_{z0} [Nm]
B38.02.007	250	1150	1000	2000	25	200	100

* Maximum stroke between fixed stops.
** $F_x = F_{allowable}$; F_u = 575 N = F_v

Type LZR 2004-38.41-30 **with Carriage Wagon**

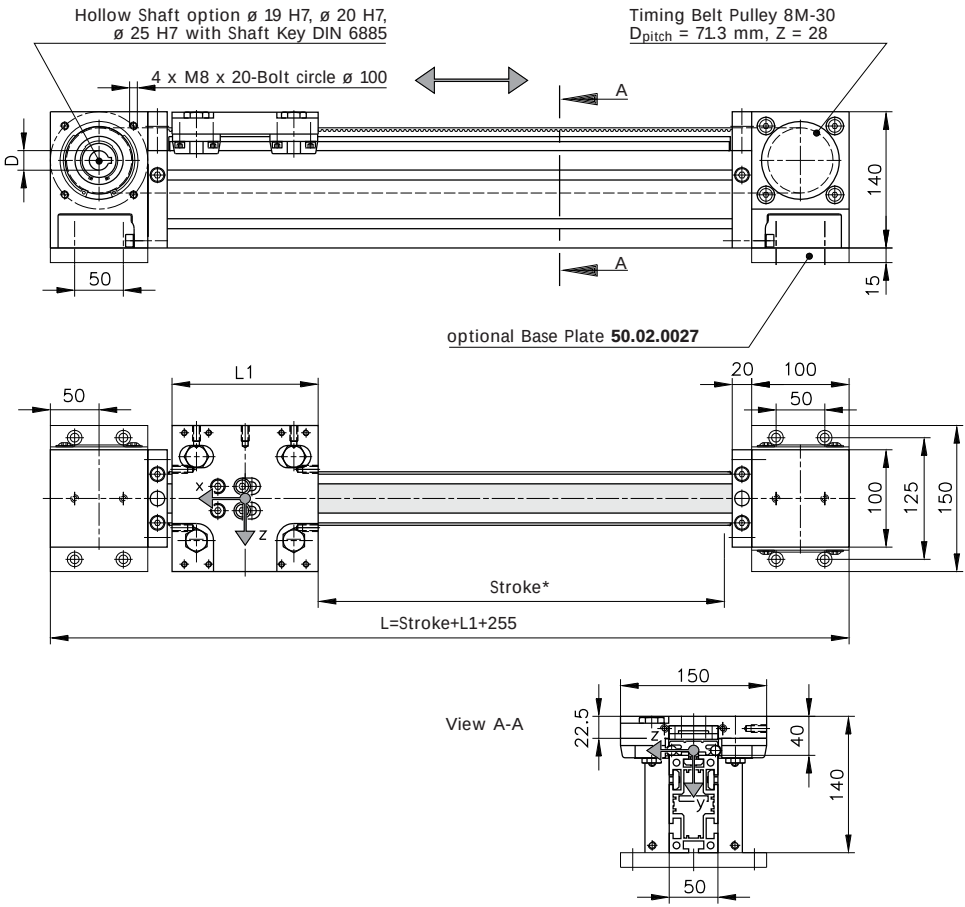

Load Data LZR 2004-38.41-30 with Carriage Wagon

Ident-No.	L1 [mm]	F_x** [N]	F_{y0} [N]	F_{z0} [N]	M_{x0} [Nm]	M_{y0} [Nm]	M_{z0} [Nm]
B38.02.004	150	4000	1000	2000	25	100	50
B38.02.004	250	4000	1000	2000	25	200	100

* Maximum stroke between fixed stops.
** $F_x = F_{allowable}$; F_u = 2000 N = F_v

Type LZR 2004-38.44-30 **with side mounted Carriage Wagon**

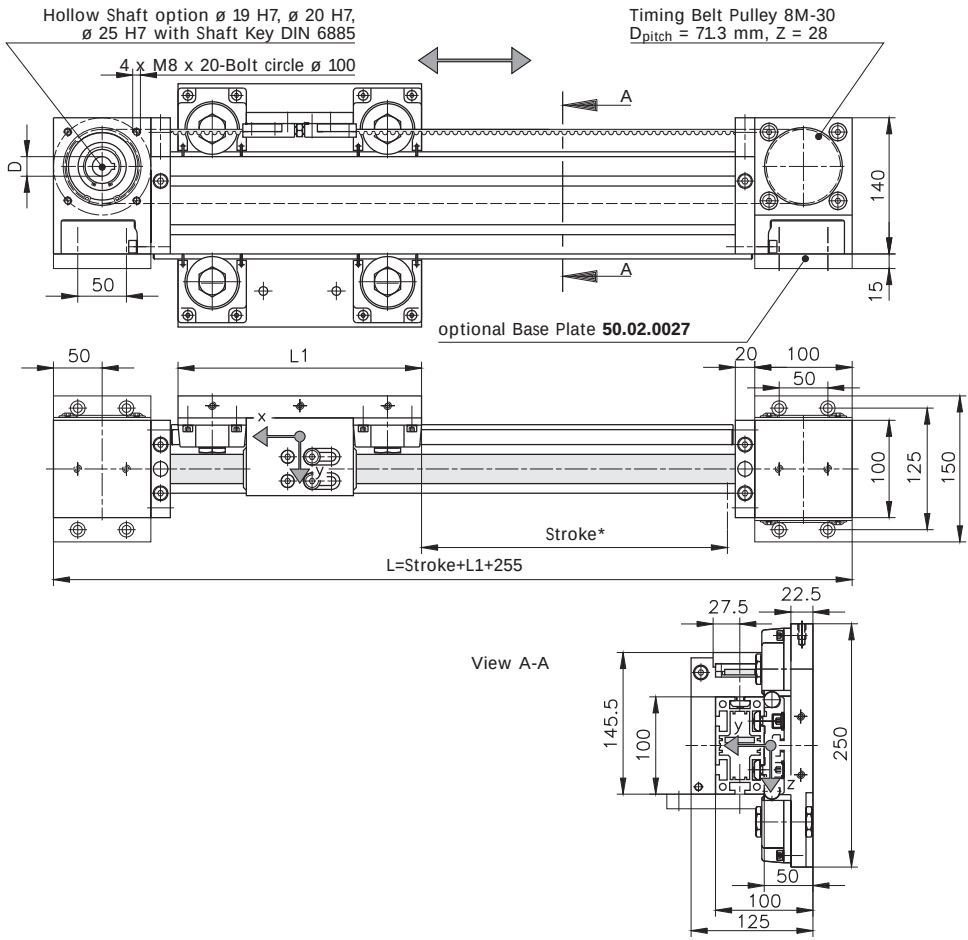

Load Data LZR 2004-38.44-30 with side mounted Carriage Wagon

Ident-No.	L1 [mm]	F_x** [N]	F_{y0} [N]	F_{z0} [N]	M_{x0} [Nm]	M_{y0} [Nm]	M_{z0} [Nm]
B38.02.005	250	4000	1600	4000	80	350	150
B38.02.005	450	4000	1600	4000	80	760	300

* Maximum stroke between fixed stops.
** $F_x = F_{allowable}$; F_u = 2000 N = F_v

Type LZR 2005-38.44-30 **with Carriage Wagon**

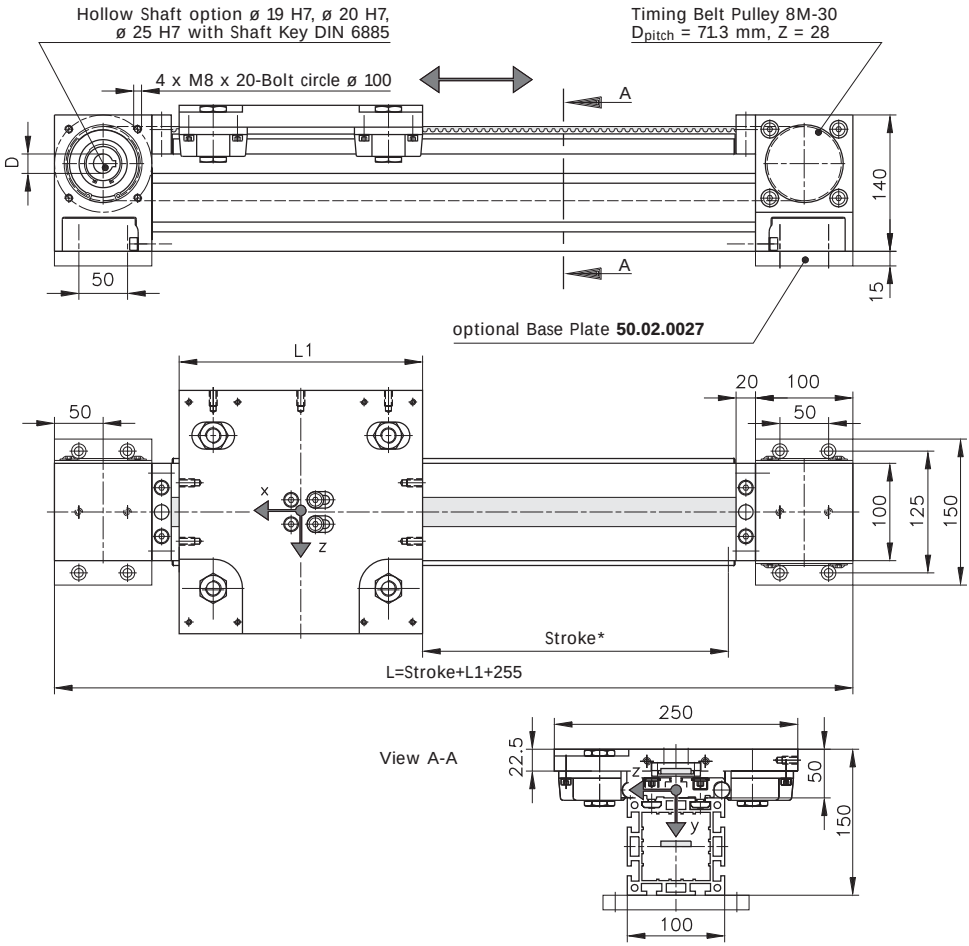

Load Data LZR 2005-38.44-30 with Carriage Wagon

Ident-No.	L1 [mm]	F_x** [N]	F_{y0} [N]	F_{z0} [N]	M_{x0} [Nm]	M_{y0} [Nm]	M_{z0} [Nm]
B38.02.006	250	4000	1600	4000	80	350	150
B38.02.006	450	4000	1600	4000	80	760	300

* Maximum stroke between fixed stops.
** $F_x = F_{allowable}$; F_u = 2000 N = F_v

Type LZR 2005-38.44-30 **with side mounted Carriage Wagon**

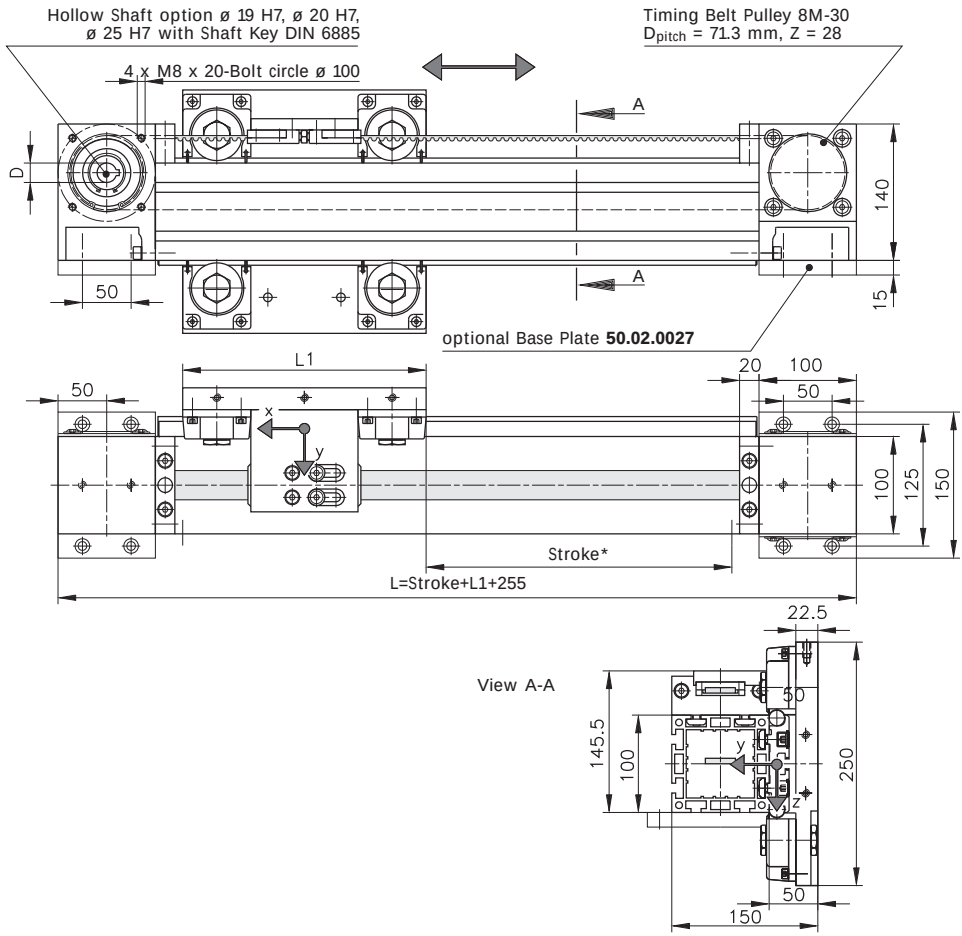

Load Data LZR 2005-38.44-30 with side mounted Carriage Wagon

Ident-No.	L1 [mm]	F_x** [N]	F_{y0} [N]	F_{z0} [N]	M_{x0} [Nm]	M_{y0} [Nm]	M_{z0} [Nm]
B38.02.009	250	4000	1600	4000	80	350	150
B38.02.009	450	4000	1600	4000	80	760	300

* Maximum stroke between fixed stops.
** $F_x = F_{allowable}$; F_u = 2000 N = F_v

Type LZR 2011-38.44-30 **with Carriage Wagon**

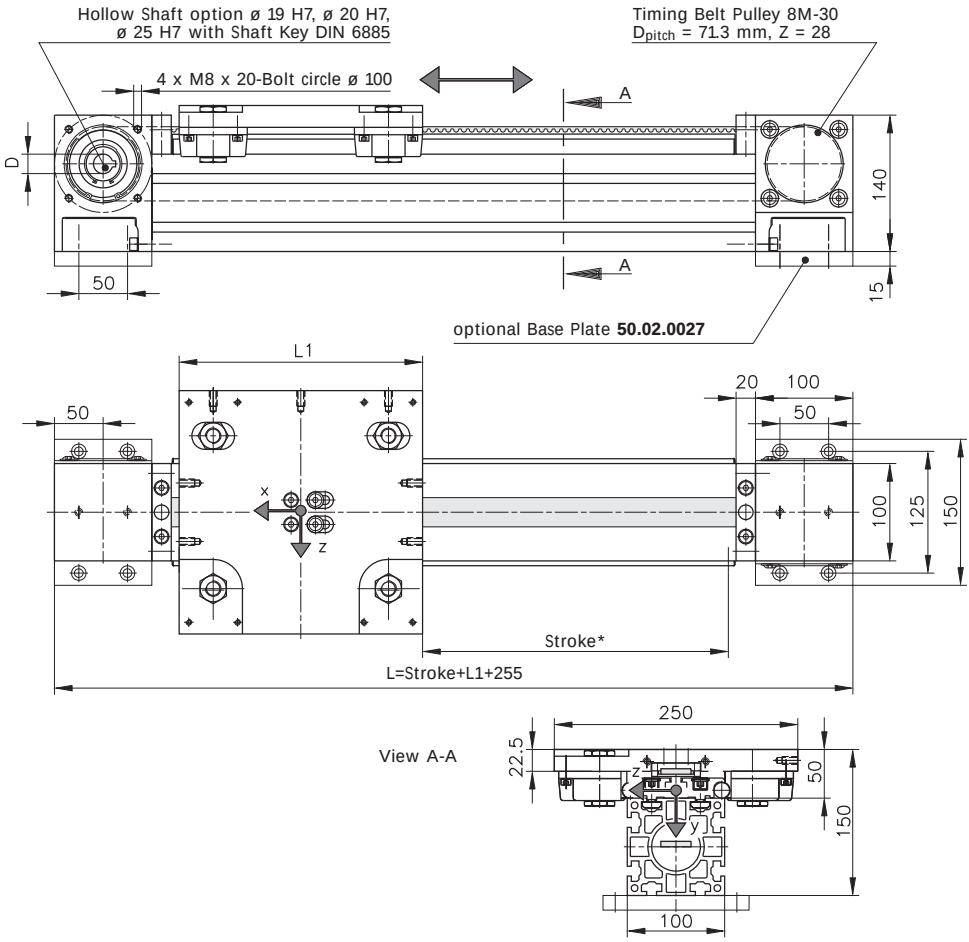

Load Data LZR 2011-38.44-30 with Carriage Wagon

Ident-No.	L1 [mm]	F_x** [N]	F_{y0} [N]	F_{z0} [N]	M_{x0} [Nm]	M_{y0} [Nm]	M_{z0} [Nm]
B38.02.011	250	4000	1600	4000	80	350	150
B38.02.011	450	4000	1600	4000	80	760	300

* Maximum stroke between fixed stops.
** $F_x = F_{allowable}$; F_u = 2000 N = F_v

Type LZR 2011-38.44-30 **with side mounted Carriage Wagon**

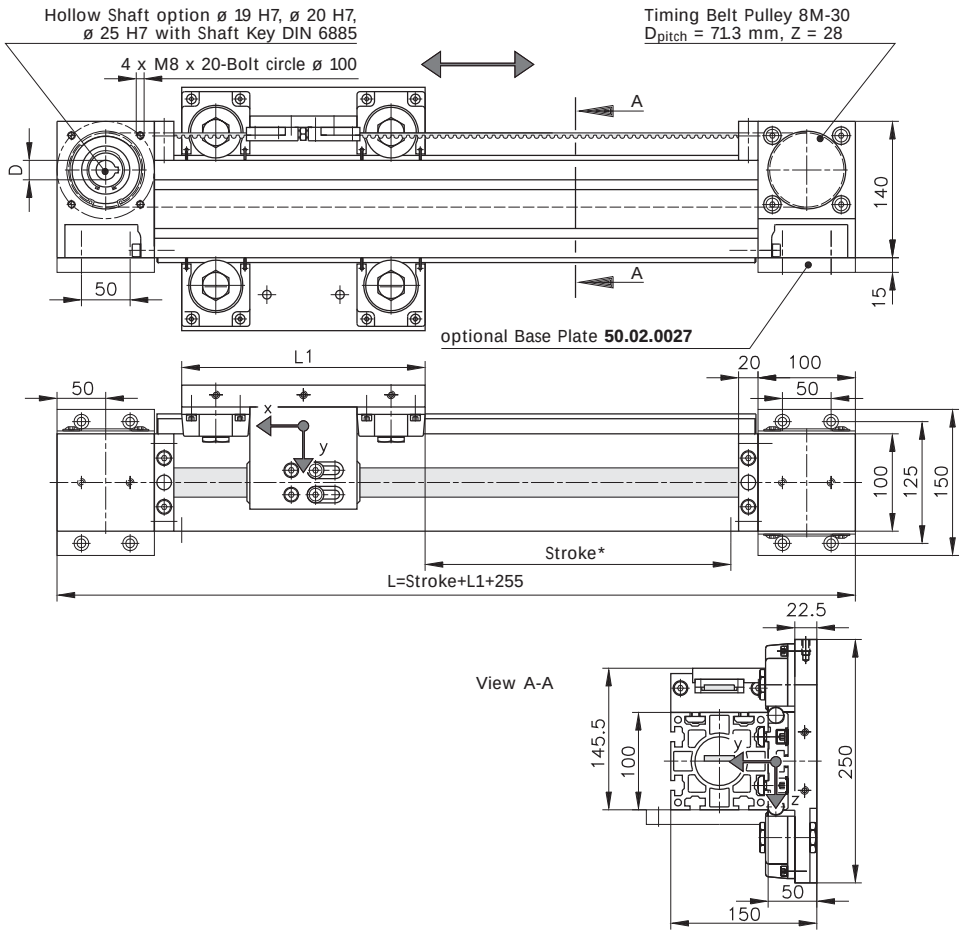

Load Data LZR 2011-38.44-30 with side mounted Carriage Wagon

Ident-No.	L1 [mm]	F_x** [N]	F_{y0} [N]	F_{z0} [N]	M_{x0} [Nm]	M_{y0} [Nm]	M_{z0} [Nm]
B38.02.010	250	4000	1600	4000	80	350	150
B38.02.010	450	4000	1600	4000	80	760	300

* Maximum stroke between fixed stops.
** $F_x = F_{allowable}$; F_u = 2000 N = F_v

mk Recirculating Ball Bearings


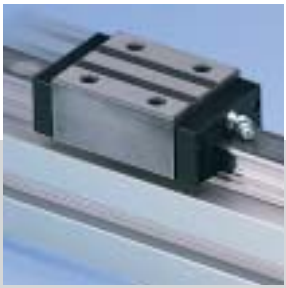

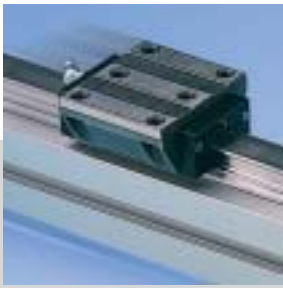

Contents mk Recirculating Ball Bearing Guides

Recirculating Ball Bearings 97

General Information 97

Size 25 98

Size 30 100

Recirculating Ball Bearings

Typical Construction

The mk Recirculating Ball Bearing Assemblies consist of one Guideway and a Carriage with recirculating ball bearings.

The carriages are made of hardened polished steel, and the ball tracks are sealed on all sides with plastic returns which guide the four ball rows. The carriage can be placed directly onto the end of the guideway.

The recirculating ball bearing assemblies can be loaded from all directions, and are very stiff, high load capacity linear guides.

The standard guide carriages offered by mk are lightly preloaded and are therefore suitable for the most common applications. If several carriages are to run on the same guideway, in a parallel arrangement for example, we recommend using carriages with no preload and some play to compensate for alignment errors and for smoother carriage travel.

For high stiffness and variable loads we recommend carriages with high preloads and precise, stiff mounting surfaces. mk supplies these versions on request.

The indicated maximum load values include a safety factor s_0 = 5 against plastic deformation at ball contact, as well as s_0 = 2 for the track mounting using 8.8 socket screws.

Order Example Guideway

Guideway	**KU 25.10**
Ident-No.	**B51.04.404**
Size	= .....mm
Length	L = ...mm

Order Example Carriage

Carriage	**KU 25.11**
Ident-No.	**K116041125**
Size	= .....mm
Carriage	normal

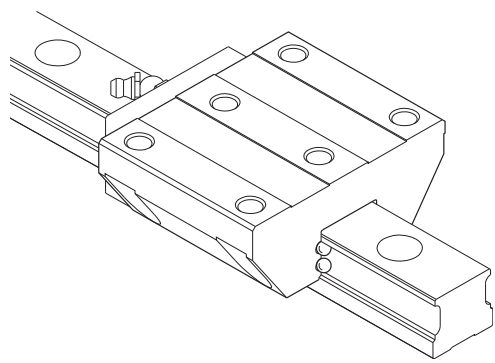

Recirculating Ball Bearings

Guideway KU 25.10

Guideway KU 25.10 is designed to be used with Carriage KU 25.11 or KU 25.13. Each element must be ordered separately.

Guideway KU 25.10 is especially suited for use with mk Series 40 and 50 profiles. Because of the narrow mounting area, it is not suitable for the 14 mm T-slots of Series 60.

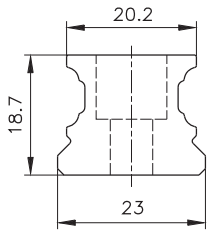

Guideway
KU 25.10
K116041025
m = 2.7 kg/m

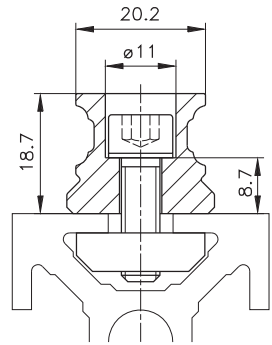

Guideway KU 25.10
with mounting hardware
B51.04.404

Hole Spacing:

Guideway L to 1980 mm single piece

Range of A: 20 ≤ A < 50

$$N = \frac{L-(2 \times A)}{60} \quad +1 \text{ (+1 each break)}$$

L = Length of the Guideway
A = Distance to first mounting hole (symmetric)
N = Number of mounting screws

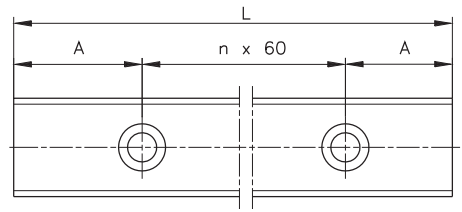

Carriages

Normal carriage
KU 25.11

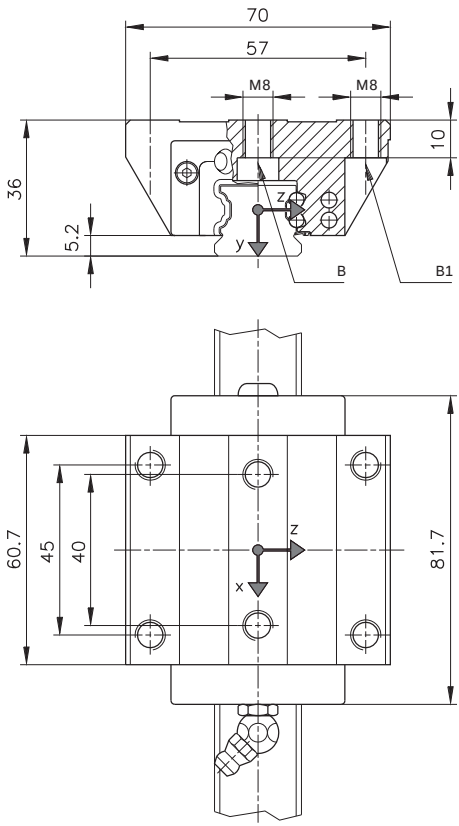

Narrow carriage
KU 25.13

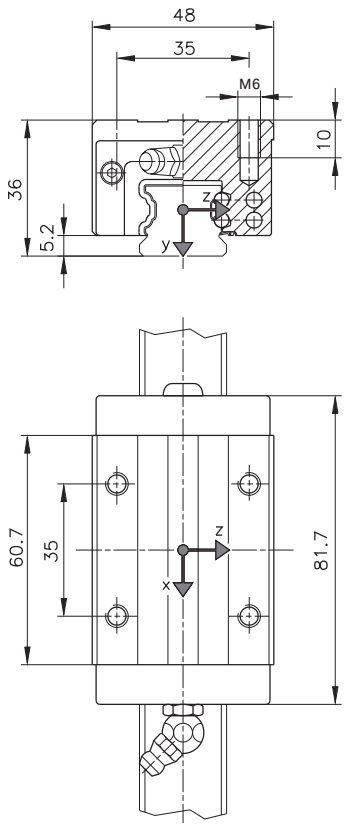

B=Thru-hole for M6 screw DIN 6912
B1=Thru-hole for M6 screw DIN EN ISO 4762

Load Data

Ident-No.	Description	F_{y0} [N]	F_{z0}* [N]	M_{x0} [Nm]	M_{y0} [Nm]	M_{z0} [Nm]	C_0 [N]	C [N]	$m_{Carriage}$ [kg]
K116041125	KU 25.11	7000	7000	75	75	75	37.000	17.900	0.71
K116041325	KU 25.13	7000	7000	75	75	75	37.000	17.900	0.56

*Reduce side load to 2000 N for track mounted to structural profiles using 8.8 screws only - with no additional mechanical track supports.

Recirculating Ball Bearings

Guideway KU 30.10

Guideway KU 30.10 is designed to be used with Carriage KU 30.11 or KU 30.13. Each element must be ordered separately.

Guideway KU 30.10 is especially suited for use with mk Series 60.

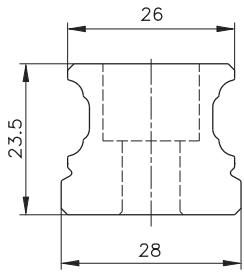

Guideway
KU 30.10
K116041030
m = 4.3 kg/m

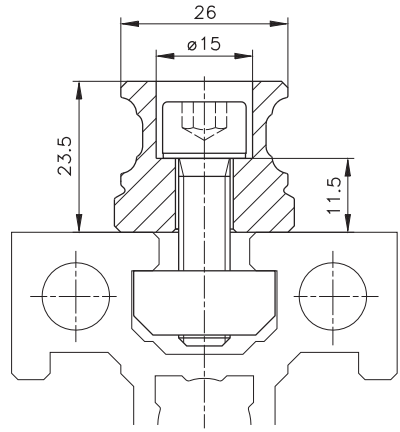

Guideway KU 30.10
with mounting hardware
B51.04.406

Hole Spacing:

Guideway L1 to 2000 mm single piece

Range of A: $20 \leq A < 60$

$$N = \frac{L1-(2 \times A)}{80} \quad +1 \text{ (+1 each break)}$$

L1 = Length of the Guideway
A = Distance to first mounting hole (symmetric)
N = Number of mounting screws

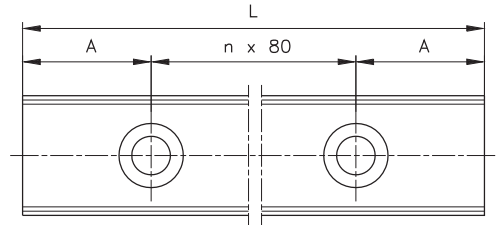

Carriages

Normal carriage
KU 30.11

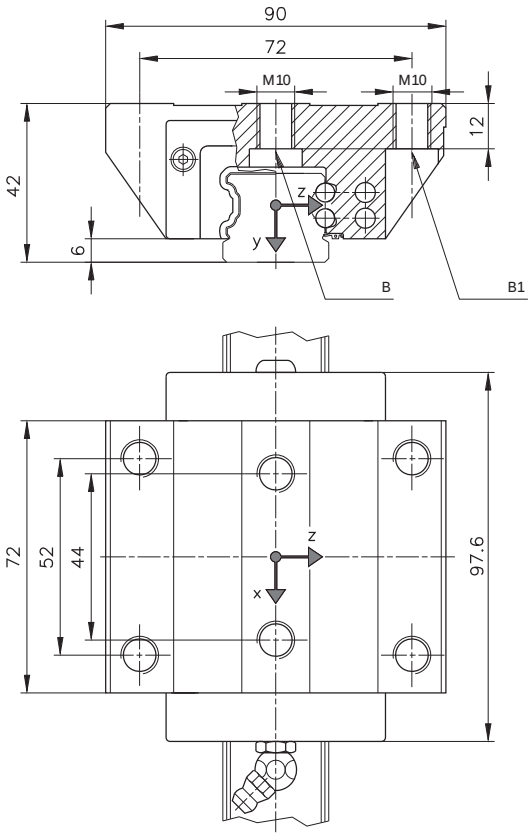

Narrow carriage
KU 30.13

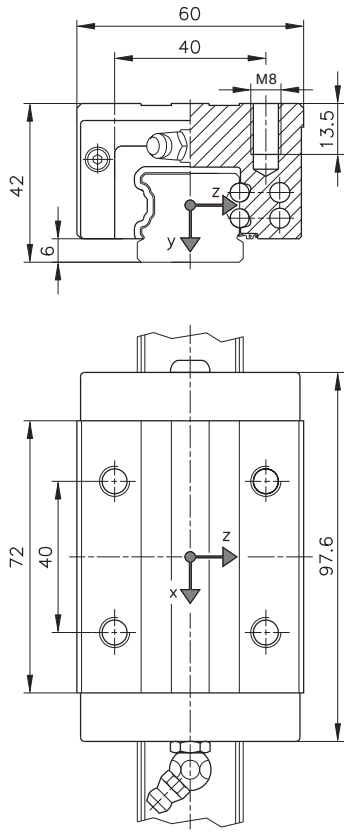

B=Thru-hole for M8 screw DIN 6912
B1=Thru-hole for M8 screw DIN EN ISO 4762

Load Data

Ident-No.	Description	F_{y0} [N]	F_{z0}* [N]	M_{x0} [Nm]	M_{y0} [Nm]	M_{z0} [Nm]	C_0 [N]	C [N]	$m_{Carriage}$ [kg]
K116041130	FW 30.11	10000	10000	140	140	140	55.000	27.500	1.4
K116041330	FW 30.13	10000	10000	140	140	140	55.000	27.500	1.09

*Reduce side load to 3500 N for track mounted to structural profiles using 8.8 screws only - with no additional mechanical track supports.

Application examples

Exhibit for displaying combined LZR 2005 with foamed combination profile as support profile and cross-carriage with support rollers

VST 2011 for manual adjustment of the conveyor height and double VST 2015 with timing belt coupling for width adjustment of the ZRF-P 2040.02 cycle conveyor

VST 2011 with digital display for width adjustment of the GUF-P 2000 AC side conveyor

Double VST 2011 adjusting unit

VST 2011 for motor drive with manual swiveling unit on LZR 2005-38.44-30

VST 2011 with digital display for width adjustment of the pneumatic centering unit on the modular belt conveyors

Application examples

Double LZR 2011 -38.44-30 as changeable table for raw material plates. Product changes in two planes one above the other

Linear module with duplex chain based on LZR 2005-38.44-30 as lift for pallet transport

Two-axis application, Z axis with cross-carriage and Omega drive

Connection of Y axis to X axis with adapter plate and console

Horizontal slide carriage consisting of LZR 2005-38.44-30 linear module with fork-shaped gripper for transferring and unloading of workpiece baskets

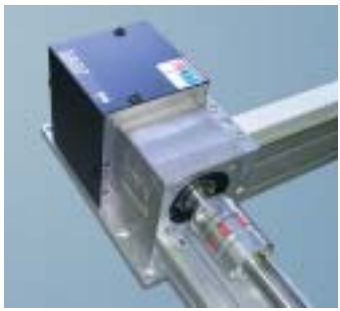

Drive X axis LZR 2004-38.41 with power split

Linear assembly for manual lane width adjustment and clamping of the pneumatic centralizer and the electromotive turning unit

Application examples

Lifts with 2-lane timing belt conveyor based on LZR 2005-38-44 with internally-arranged carriages

Lift with synchronous conveyor belt for transporting plastic bins. LZR 2005-38.44-30 linear module with two side carriages

Lift from LZR 2005-38.44-30 linear module with motor-driven adjusting unit mounted on the carriage

Lift for chain conveyors, storage system consisting of linear module with counterweight

Electromotive VST 2015 with recirculating ball bearing guide

Linear module with double carriage, toothed belt and servo motor as lift with toothed belt conveyor

Linear Module with dual-carriage, asynchronous gearmotor, variable speed and triplex-chain as lift with timing belt conveyor

Application examples

X-Z Gantry with magnetic grippers and frame with integrated guarding

X-Y-Z Gantry for machine loading with swiveling axis and vacuum gripper

X-Z Gantry with vacuum gripper as handling and loading system of steel. Two independent loading systems on common X axis with guide rollers and riding rack drive

X-Z Gantry with gripper for transferring crankshafts. X axis as LZR with support roller and timing belts, Z axis with timing belt Omega drive and fall arrest

X-Z Axis combination with pneumatic drive and suction device for loading and unloading drink crates

Our service

Range of performance

mk Parts

Reduce your planning time by using the “mk Parts” CAD parts library!

- Online at www.mk-group.com
- Off-line in the “mk QuickDesigner” software package
- Free access to CAD data
- Simple processing with native and neutral CAD formats
- Automatic part list information for the components
- Part configuration online
- Shopping cart function for online requests

mk Config

Quick and easy design of your guarding!

- Contained in the “mk QuickDesigner” software package
- Conveniently create guarding without costly design
- Cost optimization through automatic selection of default fields
- Exporting of 3D drawings for further processing or enhancement in your CAD system

mk Comparison- and Selection Tool: Conveyor Technology and Linear Motion

Immediately obtain your matching mk conveyor or linear technology system online based on your requirements!

- Online selection tool for determining the optimal system based on the parameters entered
- Comparison of up to 3 systems at a glance
- Motor selection program
- Direct link to our e-catalog

mk Profile Technology Online Shop

Order profiles, connectors and accessory elements at mk-group.com/shop – 24 hours a day!*

- Visual parts selection prevents confusion
- Search function by name or ID number
- Direct price calculation
- Order online

*Only for commercial customers of the German market

mk Online Order Tracking

Check the status of your order at any time – online!

As a registered user, you can view the history of your orders at mk in our online shop. Follow the status of your online or off-line orders. Find out, for example, whether your order is currently in assembly or whether it has already been shipped.

mk Quick Delivery Programm (QDP)

We deliver your GUF-P MINI and GUF-P 2000 fast!

- Top adherence to delivery dates and availability thanks to optimized storage and a lean manufacturing process
- We cover a wide range of applications due to standardization and modularization of these units
- Fast delivery of spare parts
- Price advantage

Our service

We're there where you need us

Headquarters, Troisdorf, Germany

Every hour of downtime for you or one of your customers costs you money and reputation. Therefore, we are on your side in the planning and design phase, as well in after-sales business as a partner. Our international network of production, sales and service sites make it possible to quickly respond to your requirements and make the service you are used to possible. Our site addresses are available on our website at www.mk-group.com/contact.

Information material

Our catalogs are organized by our four main business areas. Various product flyers complement our catalogs.

Current information about mk products and other interesting topics are also available on our website at www.mk-group.com.

mk Profile Technology Catalog

More than 250 combinable system profiles made of high-quality alloys, perfected and stability-oriented connectors, as well as a comprehensive range of accessories is available in our comprehensive 300-page mk profile technology catalog.

mk Conveyor Technology Catalog

20 different conveyor systems from belt, timing belt, chain and flat top chain conveyors to roller conveyors are available in our 320+ page mk conveyor technology catalog. Our mk INOX conveyor technology catalog includes belt and flat top chain conveyors, as well as roller conveyors made of stainless steel.

mk Linear Motion Catalog

mk linear technology stands for optimal, needs-based design. Gliding assemblies, track roller assemblies and recirculating ball bearings are displayed on 130 pages. You have the choice between profile and linear guides, as well as complete linear modules.

mk Factory Equipment Catalog

Building on our profile technology, a comprehensive range of modules for individual factory equipment is on 160 pages. It includes guarding, system workstations, guard rails, treads and platforms in modular design.

CD mk QuickDesigner

The “mk QuickDesigner” software package includes the 3D guarding configurator “mk Config” and the “mk Parts” CAD library. You can use these tools to quickly and easily design your guarding.

Mini-CD mk E-Catalog

The handy Mini-CD contains all mk catalogs in the form of an eBook. You can conveniently page and search through the catalogs on your screen, as well as save them as PDF files.

Component Index

Adapter profiles 81
Application examples 102
Carriage
- LW 38.20-04 43
- LW 38.21-04 45
- LW 38.30-04 47
- LW 38.31-04 49
- LW 38.32-04 51
- LW 38.33-04 53
- LW 38.36-04 65
- LW 38.37-04 67
- LW 38.41-04 59
- LW 38.44-04 61
- LW 38.46-04 63
- LW 38.75-44 55
- LW 38.77-44 57
- LW 38.85-44 69
-plates 75
Carriages, recirculating ball bearings 99, 101
Clamping profiles 78-80
Components, track roller assemblies
- Carriage plates 75
- Guide rods 77
- Guide rods 77
- Guide rollers 76
- Profile track 70-74
Glide assembly
- System 2000 24
- System 2000, accessories 25
Glide bushings
- Examples 23
- Glide Assembly System 2000 24, 25
- Pneumatic Glide System 2000 26, 27
Gliding assemblies 10-27
Guide rods, components 77
Guide rollers, components 76
Guideways
- KU 25.10 98
- KU 30.10 100
Linear assemblies
- Components 70-74
- Profiles Track Series 25 42, 44
- Profiles Track Series 40 46, 48, 50, 52, 54, 56
- Profiles Track Series 50 58, 60, 62
- Profiles Track Series 60 64, 66, 78
- Selection Track Rollers 40
- Technical details for Track Roller Assemblies 41
Linear module
- General information 82
- LZR 2025-38.20-16, Series 25 85
- LZR 2000-38.41-15, Series 50 86, 87
- LZR 2004-38.41-30, Series 50 88
- LZR 2004-38.44-30, Series 50 89
- LZR 2005-38.44-30, Series 50 90, 91
- LZR 2011-38.44-30, Series 50 92, 93
Linear Modules System 2011 18
- VST 2011 with one carriage 19
- VST 2011 with two carriages 20, 21
Linear Modules System 2015 14
- VST 2015 with one carriage 15
- VST 2015 with two carriages 16
Pneumatic glide system
- System 2000 26
- System 2000, accessories 27
Profiles -
- Adapter - 81
- Clamping - 78-80
- Support - 33, 35, 37, 39
Recirculating ball bearings
- Carriages 99, 101
- General information 97
- Guideways 98, 100
Support profiles
- Series 25 33
- Series 40 35
- Series 50 37
- Series 60 39
Track roller assemblies 28-93
- General information 30
- Selecting Series 25 Support Profiles 32
- Selecting Series 40 Support Profiles 34
- Selecting Series 50 Support Profiles 36

- Selecting Series 60 Support Profiles 38
- Pneumatic Glide System 2000 26, 27

Maschinenbau Kitz GmbH
Headquarters of the
mk Technology Group

Glockenstraße 84
53844 Troisdorf
Germany

Phone +49 228 4598-0
Fax +49 228 453145

www.mk-group.com
info@mk-group.com